Hannay Reels®
The reel leader.

Industrial Hose Reels

Washdown	Chemical Transfer	Potable Water	Food & Beverage Processing
Pharmaceuticals & Cosmetics	Fueling	Fire Protection	Assembly Operations
Air or Water Supply	Cable & Hose Storage	Hydraulic & Pneumatic Tools

You Can't Buy A Better Reel.

Family owned and operated since 1933

CONTENTS

Hannay hose reels come in all sizes and capacities.

Hannay Reels is the leading manufacturer of high quality hose and cable reels for most every conceivable application. This catalog describes and gives specifications on our most popular hose reels. If you don't see what you're looking for, give us a call and we will help you meet your needs.

Hannay Reels offers aluminum, carbon and stainless steel construction for most models.

Special coatings and finishes are also available.

Reel Type	I.D. Hose Sizes	Page
Hannay Reels Policies – Our Guarantee, Service Policy, Paint Notice, Return Goods Policy		3
Hannay Reels Spec Worksheet		4
Hose Assemblies, Mounting Hole Sizes		5
Spring Rewind Reels		
Series AG	1/4" – 1-1/2"	6-7
Series N400	1/4" or 3/8"	8
Series N500 (high pressure)*	1/4" or 3/8"	9
Series N600 (dual hose)	1/4" – 1/2"	10
Series 600 (dual hose)	1/4" – 3/4"	11
Series N700*	1/4" – 1/2"	12
Series 700*	1/4" – 1/2"	13
Series N800*	3/4" or 1"	14
Series 800*	3/4" or 1"	15
Series 900*	1-1/4" or 1-1/2"	16
Compact Manual Rewind Reels		
Series 1000	1/4" or 3/8" or 1/2"	17
Manual or Power Rewind Reels		
Series 1500	3/8" – 5/8"	18
Series 1800	5/8" or 3/4"	19
Series 2000 (dual hose)	1/4" – 1/2"	20
Series G2000 (dual hose, manual only)	1/4" – 1/2"	21
Series 3000 (manual only)	3/4" or 1"	22
Series 3500 (manual only)	1-1/4" or 1-1/2"	23
Series 4000	3/4" or 1"	24
Series G4100	3/4" or 1"	25
Series 6000	1/2" – 1"	26-27
Series 7000 (dual hose)	3/4" or 1"	28
Series 7500*	1-1/4" or 1-1/2"	29
Series 8000	1-1/2" or 2"	30
Series 9000	2-1/2" or 3"	31
Portable Hose Reels on Wheels		
Series 1100, AT1200	3/8" – 1"	32
Portable Storage Reels on Wheels		
Series C1150, ATC1250	NA	33
Storage Reels: Manual or Power Rewind		
Series C1500	1/4" – 1" O.D.	34
Series C3200 (manual only)	1/2" – 1-1/2" O.D.	35

*** Reel is appropriate for fuel/lubrication applications**

Hannay Reels: The industry choice.

Designed to spec and built of the highest quality materials, our reels stand up to the most demanding conditions of any industry. We offer thousands of hose and cable reels that help improve efficiency, productivity, and safety in your operation by keeping hoses and cables organized and off the floor.

The heavy-duty design and construction of our reels ensure that they outlast the competition and save you money. And bolted-on components and conveniently located swivel joints make servicing our reels quick and trouble-free.

Every reel we build is created for the industry in which it will be used, from processing to welding to maintenance and more – never retrofitted to the job. That means you can trust Hannay reels to be durable and dependable for years to come.

Uses:

- Blasting/slurry
- Hydraulic/pneumatic power tools
- Washdown and sanitation
- Chemical transfer
- Power wash/steam cleaning
- Potable water
- Pressurized air
- Gas welding
- Fuel and lubrication
- Electric cable for lights, tools, and machinery
- In-plant firefighting
- Vacuum and suction

Hannay Reels, Inc. | Phone: **518-797-3791** Toll Free: **1-877-467-3357** | Domestic FAX: **1-800-733-5464** International FAX: **518-797-3259** | **hannay.com** **reels@hannay.com**

Hannay Reels **Sales Policies**

Hannay Reels 3-Year Limited Warranty

Products manufactured by Hannay Reels, Inc. ("Hannay") are warrantied for 3 years from date of shipment when properly installed, maintained, and operated in accordance with Hannay instructions. In no event will Hannay have a warranty obligation for normal wear and tear, or for products that have, at Hannay's determination, been subjected to accident, abuse, misapplication, improper installation or improper maintenance. Common examples of normal wear and tear would include paint finish, swivel joint seal wear, and switch or motor brush wear.

Hannay makes no warranties, express or implied, other than those included in this warranty statement, and we disclaim any implied warrant of merchantability or fitness for any particular purpose. Hannay will not be liable for any consequential, incidental, or indirect damages from any cause whatsoever.

Failure to use a flexible inlet connection on any live hose reel will void the swivel joint warranty. Failure to use a properly sized circuit breaker with any electric rewind motor will void the electric motor warranty. Failure to use a filter and lubricator on any air rewind motor will void the air motor warranty. Failure to follow all procedures outlined in the Safety Guidelines document will void the warranty.

Components not manufactured by Hannay will be subject to the original manufacturers' warranties. Examples of such components include: hose and cable, motors, speed controls, and switches, swivel joints and seals, slip ring and brush assemblies.

Equipment which proves to be defective upon our inspection will be replaced free of charge, including freight to the customer. Our responsibility ceases upon delivery to any common carrier and we do not, unless previously instructed, insure shipments beyond point of delivery to such carrier. **No material will be accepted for return without a return goods authorization (RGA).** This warranty extends to the replacement or repair of the reel or part (no labor).

Hannay reserves the right to modify or alter materials, dimensions, design, and construction when necessary to improve the performance of the reel and/or accessories, or to meet delivery requirements.

Notice on Reel Finish

Standard finish on Hannay reels is a high performance modified acrylic enamel paint. Standard color is metallic graphite. Other colors available at no additional cost include red, white, black, and primer.

Most of the major components on standard reels are e-coated prior to receiving final topcoat paint finish. This combination of e-coat and enamel topcoat will meet the finish requirements of most customer applications and environments.

In cases where requirements cannot be met with the standard finish, Hannay Reels can coat any model reel with an automotive primer, allowing application of final coating at your facility. Alternatively, Hannay Reels can provide a quote for matching a customer-provided paint specification. For further information, please contact your Hannay Reels sales engineer and a special paint request form will be sent to you.

For environments where no paint finish is suitable, we offer both aluminum and stainless steel (304 grade) construction on most reel models.

Return Goods Policy

All Hannay reels are built to order. These orders are typically placed into production within 1 business day of receipt. Once production begins, it may not be possible to cancel the order.

To prevent returns because the wrong reels or parts were ordered, please use the Hannay Reels Spec Worksheet (either online or from our Order Accessory Guide) when specifying reels. Be sure to include any size, weight, pressure and/or material compatibility limitations for the application.

In the event that an item does need to be returned for credit, repair or replacement, prior approval must be obtained from Hannay Reels. Upon your request, we will send a Return Goods Authorization (RGA) form. A signed copy of this form must accompany the material when returned to us, with the RGA number clearly showing on the outside of the box—a label is provided to you that you can print and attach. No product will be accepted for return or credit without an authorized RGA number.

All material must be returned prepaid, unless otherwise noted on our RGA. No return will be accepted that has been damaged due to improper return packaging, tampered with or altered from its original condition. Our restocking and handling fee is a minimum of 25% for standard catalog reels and parts. Custom reels specially built to customer specifications cannot be returned for any reason.

Hannay Reels **Spec Worksheet**

To specify Hannay reels, fill out this simple form and mail, fax or email it to your dealer.
Photocopy this page or download and print from hannay.com

1. Who is the reel for?

Contact | Date / /

Company | Position

Street Address

City | State | Zip | Country

Phone ( ) | Fax ( ) | Email

2. What is the reel for?

HOSE (check one): ◯ Storage only ◯ Live Single hose ◯ Live Dual hose

Inside diameter:	Hose length:	Bend radius:	Flat hose dimensions:
Outside diameter:	Hose weight:	Coupling spacing:	

Type of product handled live application: (check one):

◯ Liquid (specify):	◯ Temperature:	◯ Oxygen/Acetylene:	◯ Other (specify):
◯ Gases (specify):	◯ Pressure:	◯ Hydraulic fluid (specify):	

Fluid path type: (check one): ◯ Steel (standard) ◯ Aluminum ◯ Stainless Steel ◯ Other

Reel inlet type: (check one): ◯ Swivel joint 90° (standard) ◯ Straight

Reel outlet type (riser): Size:

Thread (check one):	◯ National Pipe Thread (NPT)	◯ Joint Industry Committee (JIC)	◯ Other
	◯ National Standard Thread (NST)	◯ British Standard Pipe (BSP)	

CABLE (check one): ◯ Live* ◯ Storage only

*Number of conductors, or wire gauge, required:

*Number of connectors:	Cable weight:	Cable length:
*Voltage:	Outside diameter:	
*Amperage (live application only):	Bend radius:	

Indicate your custom specifications

3. What features does the reel need? Check type of rewind:

MANUAL REWIND

◯ Disc rewind (hand over hand) ◯ Gear-driven crank ◯ Direct crank (permanent or removable) ◯ Chain-driven crank

POWER REWIND

◯ Spring ◯ Air ◯ Electric (voltage): ◯ Hydraulic

Type of installation (check one): ◯ Floor ◯ Wall ◯ Overhead ◯ Vehicle

Temperature Range:	Environment:
Accessories (if any):	Hose/Cable Stop: ◯ Yes ◯ No
Roller Assemblies:	

Finish: ◯ Painted steel (standard) ◯ Aluminum ☐ Polished ☐ Unpolished ◯ Stainless steel ☐ Polished ☐ Unpolished

Check type of installation and roller position for spring reels:

◯ Drag Position **SR**

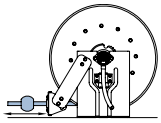

◯ Lift Position **VR**

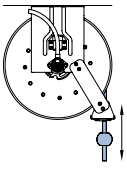

◯ Stretch (no roller) Position **TR**

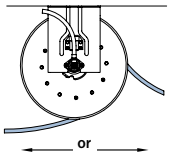

◯ Wall Mount Position **TR**

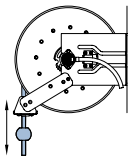

◯ Recovery (pick-up) (no roller)

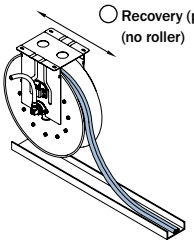

◯ Constant tension available on all roller positions

Indicate your custom specifications

4. Specifying Location of Components

Optional Location of Components:

Location of the inlet, outlet riser, and rewind mechanism can be varied to meet your requirements and **must be specified on your order.** Unless otherwise specified, most reels will be shipped as **Right Top Rewind** with the inlet, outlet riser, and rewind mechanism on the operator's right.

◯ **RT – Right Top Rewind**
Standard – Always look at your reel from this position to determine right hand or left hand.

◯ **RB – Right Bottom Rewind**

◯ **LT – Left Top Rewind**

◯ **LB – Left Bottom Rewind**

Note: Use component location initials as suffix after model number (ie: E1520-17-18 **LT**)

5. Please note size and/or weight limitations for your installation

SPECIFICATIONS

Depth:

Height:

Width:

Weight:

For custom applications not found in our catalogs, call the Inside Sales Group at 518-797-3791.

Hannay Reels, Inc. | Phone: **518-797-3791** Toll Free: **1-877-467-3357** | Domestic FAX: **1-800-733-5464** International FAX: **518-797-3259** | **hannay.com** **reels@hannay.com**

Hose **Assemblies**

Complete Reel Packages are also available.
For further information, refer to the Reel Packages Sheet at Hannay.com.

Hose Assemblies

Allow us to quote the hose along with the reel to simplify your procurement process. Hannay inventories a wide variety of hose assemblies for common applications like general purpose air and water, petroleum products, hydraulics, oxygen/acetylene, breathing air, and rescue equipment. Special lengths, fittings, and custom application assemblies are usually available in 5 to 10 business days. Beside the I.D. and Length, be sure to know the Temperature Range, Fluid, Working Pressure, and Fitting Specifications for your hose.

Low Pressure Hose

We stock a variety of low pressure hose assemblies in several sizes and lengths. We offer hose with EPDM cover and tube and brass fittings, which are excellent for air, water, and many agricultural chemicals. EPDM is recommended for outside usage due to its resistance to heat, sunlight, and weathering.

For shop use, we offer a hose with high oil resistant tube and cover. It is suitable for use with petroleum based hydraulic fluid, lubricating oil, anti-freeze, diesel fuel, water, and air and may be special ordered in several different colors. Hoses for specialty applications are available upon request.

Medium and High Pressure Hose

Several different hydraulic and general purpose hose assemblies are offered to meet the specifications of your particular application. We stock an assortment of common sizes to be able meet your needs with a minimum delivery time.

Twin Hydraulic Hose

Hannay Reels offers bonded hydraulic hose that helps solve problems associated with unwinding and storing multiple lines. Various options are available not only for hydraulic fluid, but a wide variety of chemicals, agricultural sprays, urethane foam mixers, and fire resistant fluids.

Twin Oxygen/Acetylene Hose

We stock Grade R and Grade T twin hose assemblies in 1/4" and 3/8" in lengths of 50', 75', and 100' which will cover most requirements for oxygen/acetylene, as well as propane and MAPP. For oxygen/acetylene reels, see the Hannay Welding Reels Catalog H-0408-W.

Note: All spring rewind reels complete with hose are supplied with appropriate hose stop. (See Ordering & Accessory Guide.)

Mounting Hole Sizes	
N Series Reels	7/16" wide x 7/8" long slot running front to back
Pressed Frame Reels and Channel Framed Reels	7/16" wide x 7/8" long slot running left to right
Series 1000	7/16" wide x 1 7/16" long slot
Series 1500, 1800, 2000, 4000	13/32" round holes

Series **AG** | With Patented Air Speed Control Governor

To handle 1/4" through 1-1/2" I.D. hose.

Most Hannay spring reel models are available with an air governor rewind assist, which prevents the hose from winding back onto the reel too quickly. Speed is regulated by restricting air flow through an air governor attached to the rewind mechanism. The result is smooth, controlled rewind speed each and every time.

Unlike other speed control mechanisms designed for spring rewind reels, there are 3 major advantages to the Hannay design:

1. Highly scalable – The air speed control governor can be scaled up to regulate speed on even the most powerful spring reels we offer. Other designs can only work on light-duty springs.

2. Operates in all climates – Because the AG Series uses air flow to control speed (not hydraulic fluid, which can change viscosity depending on temperature), the reel's rewind speed is controlled and unaffected, even by cold weather.

3. Fully adjustable – The end-user can turn the air restrictor clockwise or counterclockwise until the optimal rewind speed is found for the application.

For further information (other than dimensions) on any of the AG Series reels listed below, please go to the following pages in this catalog:

- AG600 Series: Go to page 11 (Series 600)
- AG700 Series: Go to page 13 (Series 700)
- AG800 Series: Go to page 15 (Series 800)
- AG900 Series: Go to page 16 (Series 900)

AG800 Series shown

Hannay Reels, Inc. | Phone: **518-797-3791** Toll Free: **1-877-467-3357** | Domestic FAX: **1-800-733-5464** International FAX: **518-797-3259** | **hannay.com** **reels@hannay.com**

With Patented Air Speed Control Governor | Series **AG**

Model Number	Hose Capacity of Reel feet m							Approx. Weight lb. kg		Std. Roller Assy.	Reel Dimensions*** in. mm									
	I.D. in. / mm	1/4 / 6	3/8 / 10	1/2 / 13	3/4 / 19	1 / 25	1-1/4 / 32	1-1/2 / 38	NET	SHIP		A	B	C	D	E	F	G	H	X	Y
	O.D. in. / mm	5/8 / 16	3/4 / 19	7/8 / 22	1-9/32 / 33	1-9/16 / 40	1-13/16 / 46	2-1/16 / 52													
AG615-23-24-10.5B		2/65	2/60	2/30	–	–	–	–	117	152	AG303	9.25	3	10.5	23.25	25.25	15.75	23.88	12.5	4.5	20
		2/20	2/18	2/9	–	–	–	–	53	69		235	76	267	591	641	400	607	318	114	508
AG617-25-26-15.5B		2/75	2/75	2/50	–	–	–	–	118	153	AG305	11.25	5	15.5	25	27	17.75	25.88	13.5	6.5	21.75
		2/23	2/23	2/15	–	–	–	–	54	69		286	127	394	635	686	451	657	343	165	552
AG617-25-26-15.5A		2/100	2/85	–	–	–	–	–	145	180	AG305	11.25	5	15.5	25	27	18.50	25.88	13.5	6.5	21.75
		2/30	2/26	–	–	–	–	–	66	82		286	127	394	635	686	470	657	343	165	552
AG618-30-31-15.5A		–	–	2/100	2/50	–	–	–	155	190	AG306	12.25	6	15.5	28.5	30.5	19.50	31.38	17	7.5	25.25
		–	–	2/30	2/15	–	–	–	70	86		311	153	394	724	775	495	797	432	190	641
AG716-19-20-10.5J		–	50	50	–	–	–	–	101	136	AG304	10.25	4	10.5	18	20	14.75	19.75	10.5	5.5	14.75
		–	15	15	–	–	–	–	46	62		260	102	267	457	508	375	502	267	139	375
AG716-23-24-15.5J		–	65	65	–	–	–	–	111	146	AG304	10.25	4	15.5	23.25	25.25	14.75	23.88	12.5	5.5	20
		–	20	20	–	–	–	–	50	66		260	102	394	591	641	375	607	318	139	508
AG716-25-26-15.5B		–	75	75	–	–	–	–	115	150	AG304	10.25	4	15.5	25	27	14	25.88	13.5	5.5	21.75
		–	23	23	–	–	–	–	52	68		260	102	394	635	686	356	657	343	139	552
AG718-25-26-15.5G		–	100	100	–	–	–	–	121	156	AG306	12.25	6	15.5	25	27	16	25.88	13.5	7.5	21.75
		–	30	30	–	–	–	–	55	71		311	152	394	635	686	406	657	343	190	552
AG718-30-31-20D		–	150	125	–	–	–	–	152	187	AG306	12.25	6	20	28.5	30.5	16.75	31.38	17	7.5	25.25
		–	46	38	–	–	–	–	69	85		311	152	508	724	775	425	797	432	190	641
AG818-23-24-10.5J		–	–	–	50	25	–	–	110	145	AG306	12.25	6	10.5	23.25	25.25	16.75	23.88	12.5	7.5	20
		–	–	–	15	8	–	–	50	66		311	152	267	591	641	425	607	318	190	508
AG816-25-26-10.5B		–	–	–	60	35	–	–	121	156	AG304	10.25	4	10.5	25	27	14.75	25.88	13.5	5.5	21.75
		–	–	–	18	11	–	–	55	71		260	102	267	635	686	375	657	343	140	552
AG818-25-26-10.5B		–	–	–	70	50	–	–	127	162	AG306	12.25	6	10.5	25	27	16.75	25.88	13.5	7.5	21.75
		–	–	–	21	15	–	–	58	73		311	152	267	635	686	425	657	343	190	552
AG820-25-26-10.5A		–	–	–	85	75	–	–	156	191	AG308	14.25	8	10.5	25	27	19.5	25.88	13.5	9.5	21.75
		–	–	–	26	23	–	–	71	87		362	204	267	635	686	495	657	434	241	552
AG820-30-31-10.5A		–	–	–	–	100	–	–	162	197	AG308	14.25	8	10.5	28.5	30.5	19.5	31.38	17	9.5	25.25
		–	–	–	–	30	–	–	73	89		362	204	267	724	775	495	797	432	241	641
AG820-30-31-15.5A		–	–	–	100	–	–	–	170	205	AG308	14.25	8	15.5	28.5	30.5	19.5	31.38	17	9.5	25.25
		–	–	–	30	–	–	–	77	93		362	204	394	724	775	495	797	432	241	641
AG920-25-26A		–	–	–	–	–	50	40	152	187	AG308	14.25	8	10.5	25	27	24	25.88	13.5	9.5	21.75
		–	–	–	–	–	15	12	69	85		362	204	267	635	686	610	657	343	241	552
AG922-30-31A		–	–	–	–	–	75	50	181	216	AG310	16.25	10	10.5	28.5	30.5	26	31.38	17	11.5	25.25
		–	–	–	–	–	23	15	82	98		413	254	267	724	775	660	797	432	292	641

Notes:

A hose stop is necessary to keep spring from unwinding.

1. Specifications subject to change.
2. Reel models and capacities shown are for standard drag applications; for vertical lift applications, consult factory.
3. Other sizes, from standard components, available on request.
4. **Finish:** Refer to page 3.
5. **Be sure to check dimensions and weights prior to ordering.**

NOTICE: A flexible connector must be used between the inlet pipe and the inlet swivel joint.

*** X, Y indicate mounting holes. See page 5.

Available Roller Positions

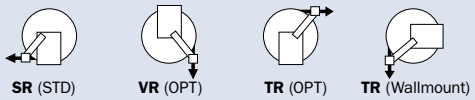

SR (STD) **VR** (OPT) **TR** (OPT) **TR** (Wallmount)

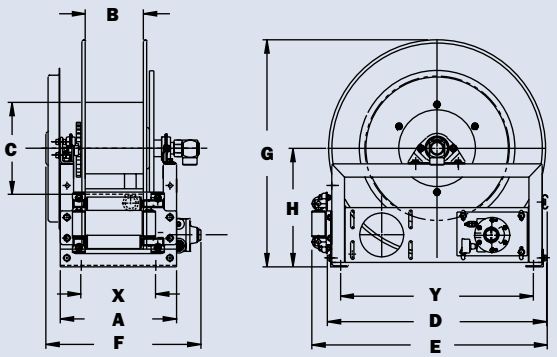

AG800 shown

Series **N400**

• **Gas Welding**

To handle twin 1/4" or 3/8" I.D. welding hose.

- Heavy-duty spring motor.
- Non-sparking ratchet assembly.
- Declutching arbor to prevent damage from reverse winding.
- Standard inlets: 90° ball bearing swivel joints, 1/2" female NPT threads.
- Standard outlets: male 9/16"-18 threads, right-hand for oxygen, left-hand for gas.
- Pressures to 300 psi (21 bar).
- Temperatures from -40°F to +200°F (-40°C to +93°C).
- Type of gas used must be specified.
- Hose stop is required.
- 4-way roller assembly.

Standard configuration shown

PARTS DRAWING – ISO 186

Model Number	Hose Capacity of Reel feet m		Approx. Weight lb. kg		Standard Roller Assy.	Reel Dimensions*** in. mm							
I.D. in. mm / O.D. in. mm	1/4 6 / .53 13	3/8 9 / .66 17	NET	SHIP		A	B	C	E	F	G	H	X
N416-17-18-8L	**2/50** 2/15	**–** –	**64** 29	**71*** 32	**N204**	**10** 254	**4** 102	**8** 203	**19.5** 495	**15.12** 368	**17.5** 445	**9.13** 232	**8** 203
N416-19-20-8L	**–** –	**2/50** 2/15	**68** 31	**75*** 34	**N204**	**10** 254	**4** 102	**8** 203	**20.75** 527	**15.12** 368	**20** 508	**10.62** 270	**8** 203
N416-19-20-10.5C	**2/25** 2/8	**2/25** 2/8	**70** 32	**77*** 35	**N204**	**10** 254	**4** 102	**10.5** 267	**20.75** 527	**15.12** 368	**20** 508	**10.62** 270	**8** 203
N416-19-20-8J	**2/50** 2/15	**2/50** 2/15	**74** 34	**83*** 38	**N204**	**10** 254	**4** 102	**8** 203	**20.75** 527	**15.12** 368	**20** 508	**10.62** 270	**8** 203
N417-23-24-10.5G	**2/75** 2/23	**2/75** 2/23	**94** 43	**115*** 52	**N205**	**11** 279	**5** 127	**10.5** 267	**23.75** 603	**16.12** 394	**24** 610	**12.62** 320	**9** 229
N417-25-26-10.5G	**2/100** 2/30	**2/100** 2/30	**97** 43	**132** 52	**N205**	**11** 279	**5** 127	**10.5** 267	**25.75** 641	**16.12** 394	**26** 660	**13.62** 346	**9** 229

Notes:

A hose stop is necessary to keep spring from unwinding.

1. Specifications subject to change.
2. Reel models and capacities shown are for standard drag applications; for vertical lift applications, consult factory.
3. Other sizes, from standard components, available on request.
4. **Finish:** Refer to page 3.
5. **Be sure to check dimensions and weights prior to ordering.**

NOTICE: A flexible connector must be used between the inlet pipe and the inlet swivel joint.

* When shipped as a parcel package (via FedEx or UPS Ground), joints loose. Net weight plus carton weight.

*** X, Y indicate mounting holes. See page 5.

Available Roller Positions

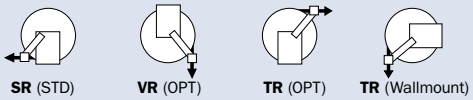

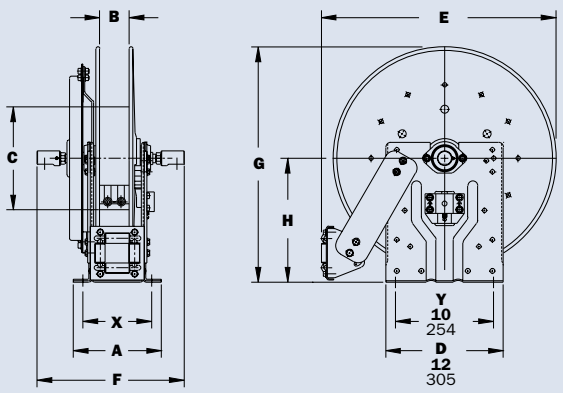

Hannay Reels, Inc.
Phone: **518-797-3791**
Toll Free: **1-877-467-3357**
Domestic FAX: **1-800-733-5464**
International FAX: **518-797-3259**
hannay.com
reels@hannay.com

High Pressure | Series N500

• Chassis Grease • Hydraulics • Air/Water

To handle single 1/4" or 3/8" I.D. hose.

- Compact frame and narrow base.
- Non-sparking ratchet assembly.
- Declutching arbor to prevent damage from reverse winding.
- Standard inlet: 90° swivel joint, 1/4" female NPT threads. 3/8" female NPT threads are optional and **must be specified.**
- Standard outlet: 1/4" female NPT threads. 3/8" female NPT threads are optional and **must be specified.**
- Other threads can be furnished and **must be specified.**
- Standard 1/4" pressure and temperature: 10,000 psi (690 bar), -40°F to +250°F (-40°C to +121°C).
- Standard 3/8" pressure and temperature: 3000 psi (207 bar), -40°F to +250°F (-40°C to +121°C).
- Optional 3/8" pressure: 8000 psi (552 bar) – must specify.
- 4-way roller assembly.
- SR and VR roller positions: swivel joint is standard on the right. TR roller positions: swivel joint is standard on the left. Other configurations available, must specify.
- Constant tension is available – consult factory.

Standard configuration shown with optional full-flow swivel joint

Optional Swivel Mounting Bracket

Part No. 9908.9990.

For N-Series spring retractable reels, available as a kit. Conditions apply, consult factory.

PARTS DRAWING – ISO 92

Model Number	Hose Capacity of Reel feet m		Approx. Weight lb. kg			Standard Roller Assy.	Reel Dimensions*** in. mm							
	I.D. in. mm	1/4 6	3/8 10	NET	UPS/ FedEx SHIP Wt.	Freight SHIP Wt.		A	B	C	E	F	G	H	X
	O.D. in. mm	5/8 16	3/4 19												
N515-14-16-8L		**25** 8	**25** 8	**48** 22	**64*** 29	**83** 38	**N203**	**9** 229	**3** 76	**8** 203	**17.62** 448	**10.12** 257	**16.25** 413	**9.12** 232	**7** 178
N515-16-17-10.5C		**35** 11	**35** 11	**51** 23	**67*** 30	**86** 39	**N203**	**9** 229	**3** 76	**10.5** 267	**18.5** 470	**10.12** 257	**17** 432	**9.12** 232	**7** 178
N515-19-20-10.5J		**50** 15	**50** 15	**63** 29	**81*** 37	**98** 44	**N203**	**9** 229	**3** 76	**10.5** 267	**20.75** 527	**10.12** 257	**20** 508	**10.62** 270	**7** 178
N515-23-24-15.5J		**75** 23	**65** 20	**75** 34	**92*** 42	**110** 50	**N203**	**9** 229	**3** 76	**15.5** 394	**23.75** 603	**10.12** 257	**24** 610	**12.62** 321	**7** 178
N516-25-26-15.5B		**75** 23	**75** 23	**90** 34	**--** --	**125** 57	**N204**	**10** 254	**4** 102	**15.5** 394	**25.25** 641	**11.12** 282	**26** 660	**13.62** 346	**8** 203

Notes:

A hose stop is necessary to keep spring from unwinding.

1. Specifications subject to change.
2. Reel models and capacities shown are for standard drag applications; for vertical lift applications, consult factory.
3. Other sizes, from standard components, available on request.
4. **Finish:** Refer to page 3.
5. **Be sure to check dimensions and weights prior to ordering.**

NOTICE: A flexible connector must be used between the inlet pipe and the inlet swivel joint.

* Dimensional weight may apply when shipped as a parcel package (via FedEx or UPS Ground).

*** X, Y indicate mounting holes. See page 5.

Available Roller Positions

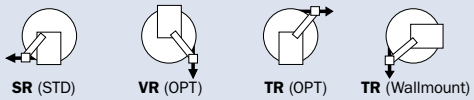

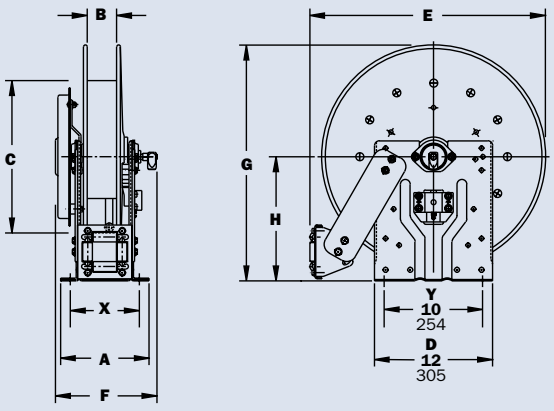

Series **N600** | Dual Hose

• Hydraulics • Spray Painting • Air/Water

To handle dual 1/4" through 1/2" I.D. hose.

- Narrow frame and compact mounting base.
- Non-sparking ratchet assembly.
- Declutching arbor to prevent damage from reverse winding.
- Standard inlets: 90° balanced pressure swivel joints, 1/2" female NPT threads.
- Standard outlets: 1/2" female NPT threads.
- Standard pressures to 3000 psi (207 bar), available up to 10,000 psi (690 bar) – must specify.
- Temperatures from -60°F to +250°F (-51°C to +121°C), optional temperatures to +400°F (+204°C) – must specify.
- 4-way roller assembly.
- SR and VR roller positions: swivel joint is standard on the right. TR roller positions: swivel joint is standard on the left. Other configurations available, must specify.
- Constant tension is available – consult factory.
- Reels for use with oxygen/acetylene. See Series N400 on page 8.
- Optional full flow swivel joint is available upon request. Add 1-3/4" to "F" dimension.

Standard configuration shown

PARTS DRAWING – ISO 80

Model Number	Hose Capacity of Reel feet m				Approx. Weight lb. kg			Standard Roller Assy.	Reel Dimensions*** in. mm							
	I.D. in. mm	1/4 6	3/8 10	1/2 13	NET	UPS/ FedEx SHIP Wt.	Freight SHIP Wt.		A	B	C	E	F	G	H	X
	O.D. in. mm	5/8 16	3/4 19	7/8 22												
N615-19-20-10.5C		**2/35** 2/11	**2/35** 2/11	**2/20** 2/6	**63** 29	**74*** 34	**98** 44	**N203**	**9** 229	**3** 76	**10.5** 267	**20.75** 527	**11.75** 298	**20** 508	**10.62** 270	**7** 178
N617-19-20-10.5J		**2/50** 2/15	**2/50** 2/15	**2/25** 2/8	**66** 30	**84*** 38	**101** 46	**N205**	**11** 279	**5** 127	**10.5** 267	**20.75** 527	**13.75** 349	**20** 508	**10.62** 270	**9** 229
N615-23-24-10.5B		**2/65** 2/20	**2/60** 2/18	**2/30** 2/9	**87** 40	**104*** 47	**122** 55	**N203**	**9** 229	**3** 76	**10.5** 267	**23.75** 603	**11.75** 298	**24** 610	**12.62** 321	**7** 178
N617-25-26-15.5B		**2/75** 2/23	**2/75** 2/23	**2/50** 2/15	**93** 42	**–** –	**128** 58	**N205**	**11** 279	**5** 127	**15.5** 394	**25.25** 641	**13.75** 349	**26** 660	**13.62** 346	**9** 229
N617-25-26-15.5A		**2/100** 2/31	**2/85** 2/26	**–** –	**120** 54	**–** –	**155** 70	**N205**	**11** 279	**5** 127	**15.5** 394	**25.25** 641	**14.5** 368	**26** 660	**13.62** 346	**9** 229

Notes:

A hose stop is necessary to keep spring from unwinding.

1. Specifications subject to change.
2. Reel models and capacities shown are for standard drag applications; for vertical lift applications, consult factory.
3. Other sizes, from standard components, available on request.
4. **Finish:** Refer to page 3.
5. **Be sure to check dimensions and weights prior to ordering.**

NOTICE: A flexible connector must be used between the inlet pipe and the inlet swivel joint.

*Dimensional weight may apply when shipped as a parcel package (via FedEx or UPS Ground).

*** X, Y indicate mounting holes. See page 5.

For hydraulic tool circuit applications, full flow swivels with Viton® seals are recommended (add 1.75 to "F" dimension in chart).

Available Roller Positions

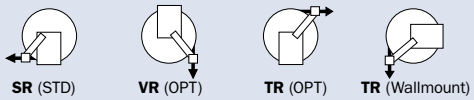

SR (STD) **VR** (OPT) **TR** (OPT) **TR** (Wallmount)

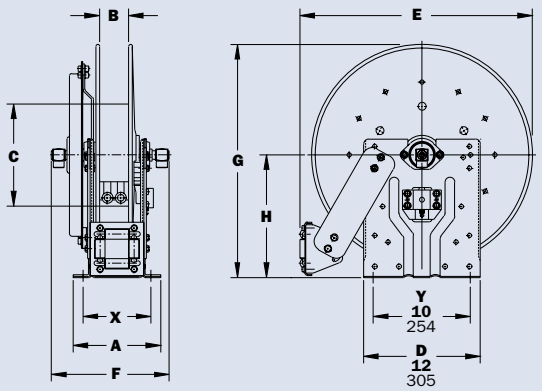

Hannay Reels, Inc. | Phone: 518-797-3791 | Toll Free: 1-877-467-3357 | Domestic FAX: 1-800-733-5464 | International FAX: 518-797-3259 | hannay.com | reels@hannay.com

Dual Hose | Series 600

• Hydraulics • Spray Painting • Air/Water

To handle dual 1/4" through 3/4" I.D. hose.

- Rollformed channel frame for heavy-duty applications.
- Non-sparking ratchet assembly.
- Declutching arbor to prevent damage from reverse winding.
- Standard inlets: 90° balanced pressure swivel joints, 1/2" female NPT threads (1" inlet available). Must be specified.
- Standard outlets: 1/2" female NPT threads (3/4" outlet available). Must be specified.
- Standard pressures to 3000 psi (207 bar), available up to 10,000 psi (690 bar) – must specify.
- Temperatures from -60°F to +250°F (-51°C to +121°C), optional temperatures to +400°F (+204°C) – must specify.
- 4-way roller assembly.
- Constant tension is available – consult factory.
- Reels for use with oxygen/acetylene. See Series N400 on page 8.
- Optional full flow swivel joint is available upon request. Add 1-3/4" to "F" dimension.

Standard configuration shown

PARTS DRAWING – ISO 8

Model Number	Hose Capacity of Reel feet m				Approx. Weight lb. kg		Standard Roller Assy.	Reel Dimensions*** in. mm									
	I.D. in. mm	1/4 6	3/8 10	1/2 13	3/4 19	NET	SHIP		A	B	C	D	E	F	G	H	X	Y
	O.D. in. mm	5/8 16	3/4 19	7/8 22	1-9/32 33													
615-23-24-10.5B		2/65 2/20	2/60 2/18	2/30 2/9	– –	70 32	105 48	R203	8.25 210	3 76	10.5 267	23.25 591	24.38 619	13 330	23.88 607	12.5 318	3.5 89	20 508
617-25-26-15.5B		2/75 2/23	2/75 2/23	2/50 2/15	– –	93 42	128 58	R205	10.25 260	5 127	15.5 394	25 635	26.12 663	15 381	25.88 657	13 343	5.5 140	21.75 552
617-25-26-15.5A		2/100 2/31	2/85 2/26	– –	– –	120 54	155 70	R205	10.25 260	5 127	15.5 394	25 635	26.12 663	15.75 400	25.88 657	13.5 343	5.5 140	21.75 552
†618-30-31-15.5A		– –	– –	2/100 2/31	2/50 2/15	130 59	165 75	R206	11.25 286	6 152	15.5 394	28.5 724	29.62 752	16.75 425	31.88 797	17 432	6.5 165	25.25 641

Notes:

A hose stop is necessary to keep spring from unwinding.

1. Specifications subject to change.
2. Reel models and capacities shown are for standard drag applications; for vertical lift applications, consult factory.
3. Other sizes, from standard components, available on request.
4. **Finish:** Refer to page 3.
5. **Be sure to check dimensions and weights prior to ordering.**

NOTICE: A flexible connector must be used between the inlet pipe and the inlet swivel joint.

***X, Y indicate mounting holes. See page 5.

† Must specify if 1" joints and 3/4" outlet risers are required.

For hydraulic tool circuit applications, full flow swivels with Viton® seals are recommended (add 1.75 to "F" dimension in chart).

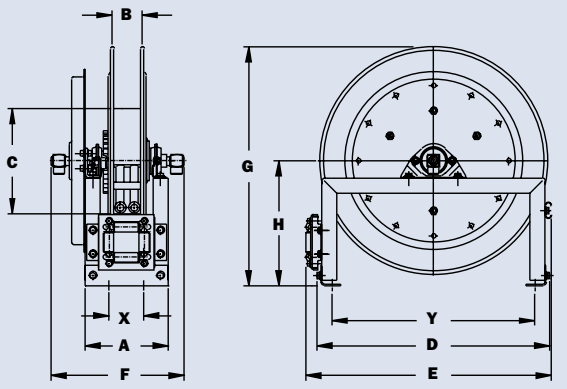

Available Roller Positions

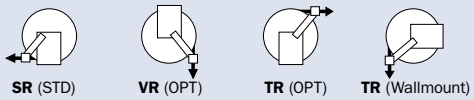

SR (STD) **VR** (OPT) **TR** (OPT) **TR** (Wallmount)

Series **N700**

• Lubrication • Air/Water • Assembly Operations
• Washdown • Air Tools • General Industrial Applications

To handle 1/4" through 1/2" I.D. hose.

- Narrow frame and compact mounting base.
- Non-sparking ratchet assembly.
- Declutching arbor to prevent damage from reverse winding.
- Standard inlet: 90° balanced pressure swivel joint, 1/2" female NPT threads.
- Standard outlet: 1/2" female NPT threads.
- Standard pressures to 3000 psi (207 bar), available up to 10,000 psi (690 bar) – must specify.
- Temperatures from -60°F to +250°F (-51°C to +121°C), optional temperatures to +400°F (+204°C) – must specify.
- 4-way roller assembly.
- SR and VR roller positions: swivel joint is standard on the right. TR roller positions: swivel joint is standard on the left. Other configurations available, must specify.
- Constant tension is available – consult factory.

Standard configuration shown

Optional Swivel Mounting Bracket
Part No. 9908.9990. For N-Series spring retractable reels, available as a kit. Conditions apply, consult factory.

PARTS DRAWING – ISO 79

Model Number	Hose Capacity of Reel feet m			Approx. Weight lb. kg			Standard Roller Assy.	Reel Dimensions*** in. mm							
	I.D. in. / mm	1/4 / 6	3/8 / 10	1/2 / 13	NET	UPS/FedEx SHIP Wt.	Freight SHIP Wt.		A	B	C	E	F	G	H	X
	O.D. in. / mm	5/8 / 16	3/4 / 19	7/8 / 22												
N716-14-16-8C		–	**25**	**25**	**52**	**64***	**87**	**N204**	**10**	**4**	**8**	**17.62**	**11.25**	**16.25**	**9.12**	**8**
		–	8	8	24	29	39		254	102	203	448	286	413	232	203
N716-16-17-10.5C		–	**35**	**35**	**55**	**67***	**90**	**N204**	**10**	**4**	**10.5**	**18.5**	**11.25**	**17**	**9.12**	**8**
		–	11	11	25	30	41		254	102	267	470	286	432	232	203
†N716-17-18-8L		–	**50†**	**50†**	**55**	**67***	**90**	**N204**	**10**	**4**	**8**	**19.5**	**11.25**	**17.5**	**9.12**	**8**
		–	15†	15†	25	30	41		254	102	203	495	286	445	232	203
N716-19-20-10.5J		–	**50**	**50**	**64**	**82***	**99**	**N204**	**10**	**4**	**10.5**	**20.75**	**11.25**	**20**	**10.62**	**8**
		–	15	15	29	37	45		254	102	267	527	286	508	270	203
N716-23-24-15.5J		–	**65**	**65**	**79**	**92***	**114**	**N204**	**10**	**4**	**15.5**	**23.75**	**11.25**	**24**	**12.62**	**8**
		–	20	20	36	42	52		254	102	394	603	286	610	321	203
N716-23-24-15.5G	**100**	**75**	**65**	**94**	**101***	**129**	**N204**	**10**	**4**	**15.5**	**23.75**	**11.25**	**24**	**12.62**	**8**	
	30	23	20	43	46	59		254	102	394	603	286	610	321	203	
N716-25-26-15.5B		–	**75**	**75**	**90**	**–**	**125**	**N204**	**10**	**4**	**15.5**	**25.25**	**11.25**	**26**	**13.62**	**8**
		–	23	23	41	–	57		254	102	394	641	286	660	346	203
N718-25-26-15.5G		–	**100**	**100**	**96**	**–**	**131**	**N206**	**12**	**6**	**15.5**	**25.25**	**13.25**	**26**	**13.62**	**10**
		–	30	30	44	–	59		305	152	394	641	337	660	346	254

Notes:

A hose stop is necessary to keep spring from unwinding.

1. Specifications subject to change.
2. Reel models and capacities shown are for standard drag applications; for vertical lift applications, consult factory.
3. Other sizes, from standard components, available on request.
4. **Finish:** Refer to page 3.
5. **Be sure to check dimensions and weights prior to ordering.**

NOTICE: A flexible connector must be used between the inlet pipe and the inlet swivel joint.

*Dimensional weight may apply when shipped as a parcel package (via FedEx or UPS Ground).

***X, Y indicate mounting holes. See page 5.

†Capacity based on low pressure air hose only. Not for vertical lift applications.

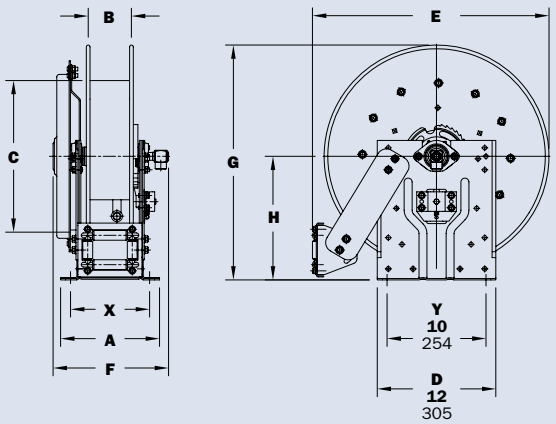

Available Roller Positions

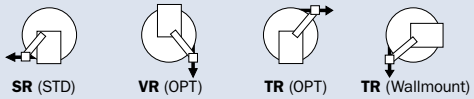

SR (STD) **VR** (OPT) **TR** (OPT) **TR** (Wallmount)

Hannay Reels, Inc. | Phone: **518-797-3791** Toll Free: **1-877-467-3357** | Domestic FAX: **1-800-733-5464** International FAX: **518-797-3259** | **hannay.com** **reels@hannay.com**

Series 700

• Lubrication • Air/Water • Assembly Operations
• Washdown • Air Tools • General Industrial Applications

To handle 1/4" through 1/2" I.D. hose.

- Rollformed channel frame for heavy-duty applications.
- Non-sparking ratchet assembly.
- Declutching arbor to prevent damage from reverse winding.
- Standard inlet: 90° balanced pressure swivel joint, 1/2" female NPT threads.
- Standard outlet: 1/2" female NPT threads.
- Standard pressures to 3000 psi (207 bar), available up to 10,000 psi (690 bar) – must specify.
- Temperatures from -60°F to +250°F (-51°C to +121°C), optional temperaturess to +400°F (+204°C) – must specify.
- 4-way roller assembly.
- SR and VR roller positions: swivel joint is standard on the right. TR roller positions: swivel joint is standard on the left. Other configurations available, must specify.
- Constant tension is available – consult factory.

Standard configuration shown

PARTS DRAWING – ISO 66

Model Number	Hose Capacity of Reel feet m			Approx. Weight lb. kg			Standard Roller Assy.	Reel Dimensions*** in. mm									
	I.D. in. mm	1/4 6	3/8 10	1/2 13	NET	UPS/ FedEx SHIP Wt.	Freight SHIP Wt.		A	B	C	D	E	F	G	H	X	Y
	O.D. in. mm	5/8 16	3/4 19	7/8 22														
716-23-24-15.5J		–	65	65	79	86*	114	R204	9.25	4	15.5	23.25	24.38	12.75	23.88	12.5	4.5	20
		–	20	20	36	39	52		235	102	394	591	619	324	607	318	114	508
716-23-24-15.5G		100	75	65	94	102*	129	R204	9.25	4	15.5	23.25	24.38	12.75	23.88	12.5	4.5	20
		30	23	20	43	46	59		235	102	394	591	619	324	607	318	114	508
716-25-26-15.5B		–	75	75	90	–	125	R204	9.25	4	15.5	25	26.12	12.75	25.88	13.5	4.5	21.75
		–	23	23	41	–	57		235	102	394	635	663	324	657	343	114	552
718-25-26-15.5G		–	100	100	96	–	131	R206	11.25	6	15.5	25	26.12	14.75	25.88	13.5	6.5	21.75
		–	30	30	44	–	59		286	152	394	635	663	375	657	343	165	552
718-30-31-20D		–	150	125	127	–	162	R206	11.25	6	20	28.5	29.62	15.5	31.38	17	6.5	25.25
		–	46	38	58	–	73		286	152	508	724	752	394	797	432	165	641

Notes:

A hose stop is necessary to keep spring from unwinding.

1. Specifications subject to change.
2. Reel models and capacities shown are for standard drag applications; for vertical lift applications, consult factory.
3. Other sizes, from standard components, available on request.
4. **Finish:** Refer to page 3.
5. **Be sure to check dimensions and weights prior to ordering.**

NOTICE: A flexible connector must be used between the inlet pipe and the inlet swivel joint.

*Dimensional weight may apply when shipped as a parcel package (via FedEx or UPS Ground).

*** X, Y indicate mounting holes. See page 5.

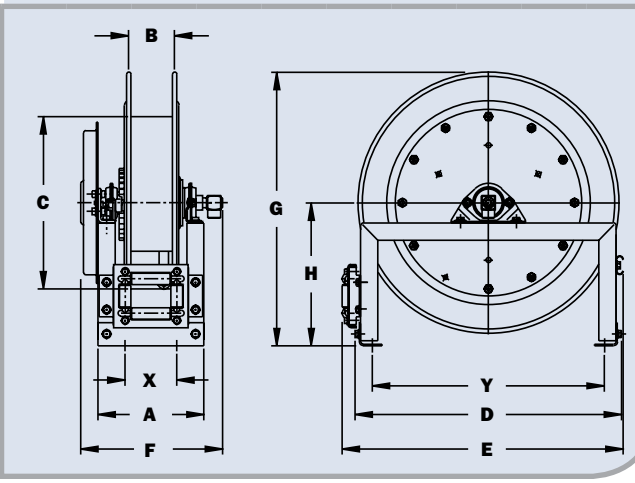

Available Roller Positions

SR (STD) **VR** (OPT) **TR** (OPT) **TR** (Wallmount)

Series **N800**

- **Fuel Dispensing** (Consult Factory)
- **Waste Oil Evacuation • Air/Water**

To handle 3/4" or 1" I.D. hose.

- Narrow frame and compact mounting base.
- Non-sparking ratchet assembly.
- Declutching arbor to prevent damage from reverse winding.
- Standard inlet: 90° balanced pressure swivel joint, 1" female NPT threads.
- Standard outlet: 1" female NPT threads.
- Standard pressures to 2000 psi (138 bar), available up to 6000 psi (414 bar) – must specify.
- Temperatures from -40°F to +250°F (-40°C to +121°C), optional temperatures to +400°F (+204°C) – must specify.
- 4-way roller assembly.
- SR and VR roller positions: swivel joint is standard on the right. TR roller positions: swivel joint is standard on the left. Other configurations available, must specify.
- Constant tension is available – consult factory.

Optional TR roller position shown

PARTS DRAWING – ISO 81

Model Number	Hose Capacity of Reel feet m		Approx. Weight lb. kg			Standard Roller Assy.	Reel Dimensions*** in. mm							
	I.D. in. mm O.D. in. mm	3/4 19 1-9/32 33	1 25 1-1/2 38	NET	UPS/ FedEx SHIP Wt.	Freight SHIP Wt.		A	B	C	E	F	G	H	X
N816-19-20-10.5J		25 8	15 5	75 34	83* 38	110 50	N204	10 254	4 102	10.5 267	20.75 527	13 330	20 508	10.62 270	8 203
†N818-23-24-10.5J		50† 15†	25† 8†	87 39	– –	122 55	N206	12 305	6 152	10.5 267	23.75 603	15 381	24 610	12.62 321	10 254
N816-25-26-10.5B		60 18	35 11	96 44	– –	131 59	N204	10 254	4 102	10.5 267	25.25 641	13 330	26 660	13.62 346	8 203
N818-25-26-10.5B		70 21	50 15	102 46	– –	137 62	N206	12 305	6 152	10.5 267	25.25 641	15 381	26 660	13.62 346	10 254

Notes:

A hose stop is necessary to keep spring from unwinding.

1. Specifications subject to change.
2. Reel models and capacities shown are for standard drag applications; for vertical lift applications, consult factory.
3. Other sizes, from standard components, available on request.
4. **Finish:** Refer to page 3.
5. **Be sure to check dimensions and weights prior to ordering.**

NOTICE: A flexible connector must be used between the inlet pipe and the inlet swivel joint.

*Dimensional weight may apply when shipped as a parcel package (via FedEx or UPS Ground).

*** X, Y indicate mounting holes. See page 5.

†Capacity based on low pressure air hose only.

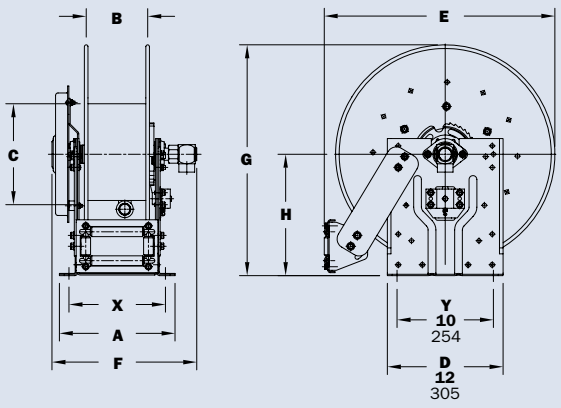

Available Roller Positions

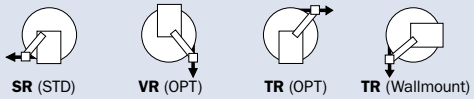

SR (STD) **VR** (OPT) **TR** (OPT) **TR** (Wallmount)

Hannay Reels, Inc.
Phone: **518-797-3791**
Toll Free: **1-877-467-3357**
Domestic FAX: **1-800-733-5464**
International FAX: **518-797-3259**
hannay.com
reels@hannay.com

Series **800**

• Fuel Dispensing (Consult Factory)
• Waste Oil Evacuation • Air/Water

To handle 3/4" or 1" I.D. hose.

- Rollformed channel frame for heavy-duty applications.
- Non-sparking ratchet assembly.
- Declutching arbor to prevent damage from reverse winding.
- Standard inlet: 90° balanced pressure swivel joint, 1" female NPT threads.
- Standard outlet: 1" female NPT threads.
- Standard pressures to 2000 psi (138 bar), available up to 6000 psi (414 bar) – must specify.
- Temperatures from -40°F to +250°F (-40°C to +121°C), optional temperatures to +400°F (+204°C) – must specify.
- 4-way roller assembly.
- SR and VR roller positions: swivel joint is standard on the right. TR roller positions: swivel joint is standard on the left. Other configurations available, must specify.
- Constant tension is available – consult factory.

Standard configuration shown

PARTS DRAWING – ISO 42

Model Number	Hose Capacity of Reel feet m		Approx. Weight lb. kg		Standard Roller Assy.	Reel Dimensions*** in. mm									
	I.D. in. mm O.D. in. mm	3/4 19 1-9/32 33	1 25 1-1/2 38	NET	SHIP		A	B	C	D	E	F	G	H	X	Y
†818-23-24-10.5J		50† 15†	25† 8†	87 39	122 55	R206	11.25 286	6 152	10.5 267	23.25 591	24.38 619	15.5 394	23.88 607	12.5 318	6.5 165	20 508
816-25-26-10.5B		60 18	35 11	96 44	131 59	R204	9.25 235	4 102	10.5 267	25 635	26.12 663	13.5 343	25.88 657	13.5 343	4.5 114	21.75 552
818-25-26-10.5B		70 21	50 15	102 46	137 62	R206	11.25 286	6 152	10.5 267	25 635	26.12 663	15.5 394	25.88 657	13.5 343	6.5 165	21.75 552
820-25-26-10.5A		85 26	75 23	131 59	166 75	R308	13.25 337	8 203	10.5 267	25 635	27 686	18.25 464	25.88 657	13.5 343	8.5 216	21.75 552
820-30-31-10.5A		– –	100 30	137 62	172 78	R308	13.25 337	8 203	10.5 267	28.5 724	30.5 775	18.25 464	31.38 797	17 432	8.5 216	25.25 641
820-30-31-15.5A		100 30	– –	145 66	180 82	R308	13.25 337	8 203	15.5 394	28.5 724	30.5 775	18.25 464	31.38 797	17 432	8.5 216	25.25 641

Notes:

A hose stop is necessary to keep spring from unwinding.

1. Specifications subject to change.
2. Reel models and capacities shown are for standard drag applications; for vertical lift applications, consult factory.
3. Other sizes, from standard components, available on request.
4. **Finish:** Refer to page 3.
5. **Be sure to check dimensions and weights prior to ordering.**

NOTICE: A flexible connector must be used between the inlet pipe and the inlet swivel joint.

*** X, Y indicate mounting holes. See page 5.

†Capacity based on low pressure air hose only.

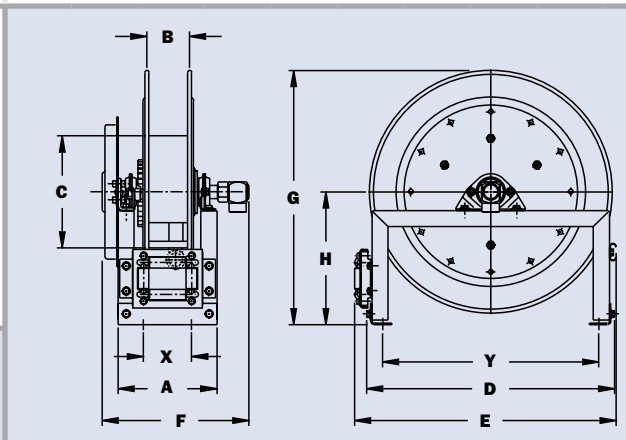

Available Roller Positions

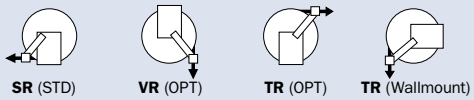

Series **900**

- **Bulk Transfer • Fuel Dispensing** (Consult Factory)
- **Suction/Discharge** (Consult Factory)

To handle 1-1/4" or 1-1/2" I.D. hose.

- Rollformed channel frame construction.
- Non-sparking ratchet assembly.
- Declutching arbor to prevent damage from reverse winding.
- Standard inlet: 90° swivel joint, 1-1/2" female NPT threads, and 2" Victaulic® groove.
- Standard outlet: 1-1/2" female NPT threads.
- Standard pressures to 600 psi (41 bar).
- Temperatures from -25°F to +250°F (-32°C to +121°C).
- 4-way roller assembly.
- SR and VR roller positions: swivel joint is standard on the right. TR roller positions: swivel joint is standard on the left. Other configurations available, must specify.
- Constant tension is available – consult factory.

Standard configuration shown

PARTS DRAWING – ISO 29

Model Number	Hose Capacity of Reel feet m		Approx. Weight lb. kg		Standard Roller Assy.	Reel Dimensions*** in. mm								
	I.D. in. / mm	1-1/4 / 32	1-1/2 / 38	NET	SHIP		A	B	D	E	F	G	H	X	Y
	O.D. in. / mm	1-13/16 / 46	2-1/16 / 52												
922-23-24B		**40** / 12	**25** / 8	**104** / 47	**139** / 63	**R310**	**15.25** / 387	**10** / 254	**23.25** / 591	**25.25** / 641	**24** / 610	**23.88** / 607	**12.5** / 318	**10.5** / 267	**20** / 508
920-25-26A		**50** / 15	**40** / 12	**127** / 58	**162** / 73	**R308**	**13.25** / 337	**8** / 203	**25** / 635	**27** / 686	**22.75** / 578	**25.88** / 657	**13.5** / 343	**8.5** / 216	**21.75** / 552
922-30-31A		**75** / 23	**50** / 15	**156** / 71	**191** / 87	**R310**	**15.25** / 387	**10** / 254	**28.5** / 724	**30.5** / 775	**24.75** / 629	**31.38** / 797	**17** / 432	**10.5** / 267	**25.25** / 641

Notes:

A hose stop is necessary to keep spring from unwinding.

1. Specifications subject to change.
2. Reel models and capacities shown are for standard drag applications; for vertical lift applications, consult factory.
3. Other sizes, from standard components, available on request.
4. **Finish:** Refer to page 3.
5. **Be sure to check dimensions and weights prior to ordering.**

NOTICE: A flexible connector must be used between the inlet pipe and the inlet swivel joint.

*** X, Y indicate mounting holes. See page 5.

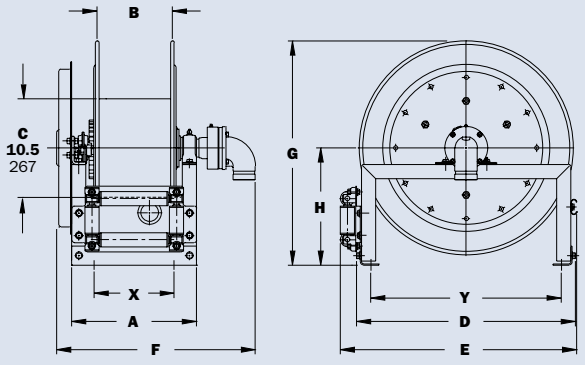

Available Roller Positions

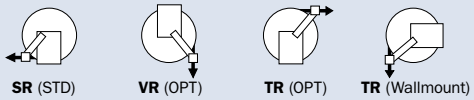

Hannay Reels, Inc. | Phone: 518-797-3791 | Toll Free: 1-877-467-3357 | Domestic FAX: 1-800-733-5464 | International FAX: 518-797-3259 | hannay.com | reels@hannay.com

Series **1000**

• Pressure Washing • Washdown
• Spray Operations • Air

To handle single 1/4", 3/8" or 1/2" I.D. hose.

- Lightweight, compact with an e-coated frame.
- Direct crank rewind permanently attached.
- Adjustable cam-lock brake standard.
- Exterior mounting holes for easier installation.
- Redesigned (and field installable) pin lock.
- Standard inlet: 90° ball bearing swivel joint, 1/2" female NPT threads.
- Standard outlet: 3/8" female NPT threads, 1/2" available upon request.
- Standard pressures to 3000 psi (207 bar), available up to 5,000 psi (345 bar) – must specify.
- Temperatures from +20°F to +400°F (-7°C to +204°C).

Standard configuration shown with optional pin lock

PARTS DRAWING – ISO 165

Model Number	Hose Capacity of Reel feet m			Approx. Weight Crank Rewind lb. kg			Reel Dimensions*** in. mm			
	I.D. in. mm	1/4 6	3/8 10	1/2 13	NET	UPS/ FedEx SHIP Wt.	Freight SHIP Wt.	A	B	F	X
	O.D. in. mm	5/8 16	3/4 19	7/8 22							
1014-14-16		**100** 31	**75** 23	**40** 12	**23** 10	**42*** 19	**58** 26	**11.5** 292	**6** 152	**19.25** 489	**10** 254
1016-14-16		**150** 46	**100** 31	**70** 21	**24** 11	**42*** 19	**59** 27	**13.5** 343	**8** 203	**21.25** 540	**12** 305
1020-14-16		**250** 76	**175** 53	**100** 30	**25** 11	**42*** 19	**60** 27	**17.5** 445	**12** 305	**25.25** 641	**16** 406

Notes:

1. Specifications subject to change.
2. Other sizes, from standard components, available on request.
3. **Finish:** Refer to page 3.
4. **Be sure to check dimensions and weights prior to ordering.**

NOTICE: A flexible connector must be used between the inlet pipe and the inlet swivel joint.

* Dimensional weight may apply when shipped as a parcel package (via FedEx or UPS Ground).

*** X, Y indicate mounting holes.

See page 5.

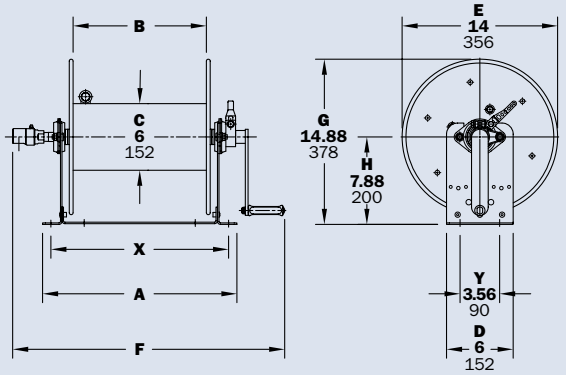

Series **1500**

• Lawn Care • Pest Control • Pressure Washing
• Agriculture • Steam Cleaning

To handle single 3/8" through 5/8" I.D. hose.

- Lightweight, compact reels designed for long lengths of hose in manual and power rewind.
- Manual rewind reels include: cam-lock drag brake, spring actuated pin lock and direct crank rewind.
- Power rewind reels include: chain and sprocket drive powered by electric, hydraulic or air motor.
- Standard inlet: 90° ball bearing swivel joint, 1/2" female NPT threads.
- Standard outlet: 1/2" female NPT threads.
- Standard pressures to 3000 psi (207 bar), available up to 10,000 psi (690 bar) – must specify.
- Temperatures from +20°F to +400°F (-7°C to +204°C).
- Rollers and roller mounting brackets are accessory items. Specify roller position.

Electric Rewind

Standard configuration shown

Optional External Mounting Brackets

Part No. 9906.0027.
Add 2-1/2" to the X dimensions shown in the chart.

PARTS DRAWING – ISO 90 (POWER); ISO 179 (MANUAL)

Model Number (For power rewind see Note 5)	Hose Capacity of Reel feet m			Approx. Weight Crank Rewind lb. kg (see Note 3)			Reel Dimensions*** in. mm						
	I.D. in. mm	3/8 10	1/2 13	5/8 16	NET	UPS/ FedEx SHIP Wt.	Freight SHIP Wt.	A	B	E CRANK	E POWER	F CRANK	F POWER	X
	O.D. in. mm	3/4 19	7/8 22	1 25										
1514-17-18		**125**	**75**	**50**	**27**	**65***	**62**	**11**	**6**	**16.5**	**19**	**19.25**	**16.5**	**9.5**
		38	23	15	12	30	28	279	152	419	483	489	419	241
1520-17-18		**275**	**175**	**125**	**29**	**80***	**64**	**17**	**12**	**16.5**	**19**	**25.25**	**22.5**	**15.5**
		84	53	38	13	36	29	432	305	419	483	641	572	394
1526-17-18		**400**	**300**	**200**	**31**	**98***	**66**	**23**	**18**	**16.5**	**19**	**31.25**	**28.5**	**21.5**
		122	91	61	14	45	30	584	457	419	483	794	724	546
1530-17-18		**500**	**375**	**275**	**33**	**110***	**68**	**27**	**22**	**16.5**	**19**	**35.25**	**32.5**	**25.5**
		152	114	84	15	50	31	686	559	419	483	895	826	648
1536-17-18		**–**	**475**	**350**	**35**	**129***	**70**	**33**	**28**	**16.5**	**19**	**41.25**	**38.5**	**31.5**
		–	145	107	16	59	32	838	711	419	483	1048	978	800

Notes:

1. Specifications subject to change.
2. Upon request, reels can be supplied with drum lengths other than shown.
3. Weights shown in chart are for crank rewind models. ADD these amounts for power rewind models (does not apply to FedEx or UPS):

	Net lbs/kg	Ship lbs/kg
Electric	**18**/8.2	**18**/8.2
Hydraulic	**15**/6.8	**15**/6.8
Air	**15**/6.8	**15**/6.8

4. Dimension "F" is the overall length of standard model reels.
5. When ordering power rewind models, prefix model number with:
   A = Air Rewind – Supplied with control valve and 18" air hose.
   E = Electric Rewind – 12v and 24v DC rewind reels are supplied with switch and solenoid; 115v AC rewind reels are not supplied with switch but can be ordered separately.
   HD = Hydraulic Rewind – Not supplied with control valve.
6. Manual rewind available in RT or LB configurations only.
7. **Finish:** Refer to page 3.
8. **Be sure to check dimensions and weights prior to ordering.**
9. Some roller options may prohibit the use of our molded chain guard.

NOTICE: A flexible connector must be used between the inlet pipe and the inlet swivel joint.

* Dimensional weight applies when shipped as a parcel package (via FedEx or UPS Ground).

*** X, Y indicate mounting holes. See page 5.

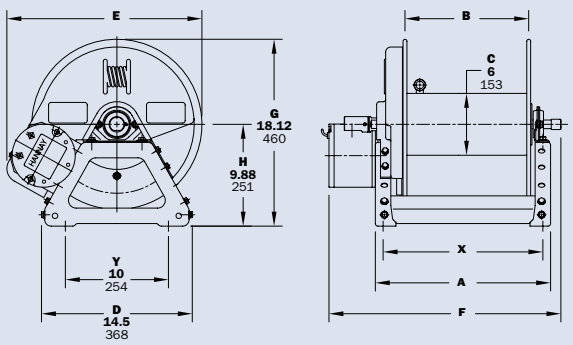

Electric rewind shown

Hannay Reels, Inc.
Phone: 518-797-3791
Toll Free: 1-877-467-3357
Domestic FAX: 1-800-733-5464
International FAX: 518-797-3259
hannay.com
reels@hannay.com

Series **1800**

• Air Compressors • Washdown

To handle single 5/8" or 3/4" I.D. hose.

- Lightweight, compact reels designed for long lengths of hose in manual and power rewind.
- Manual rewind reels include: cam-lock drag brake, spring actuated pin lock and direct crank rewind.
- Power rewind reels include: chain and sprocket drive powered by electric, hydraulic or air motor.
- Standard inlet: 90° ball bearing swivel joint, 1" female NPT threads.
- Standard outlet: 3/4" female NPT threads.
- Standard pressures to 2000 psi (138 bar), available up to 4000 psi (276 bar) – must specify.
- Temperatures from -40°F to +250°F (-40°C to +121°C).
- Rollers and roller mounting brackets are accessory items. Specify roller position.

Electric rewind

Standard configuration shown

Optional External Mounting Brackets

Part No. 9906.0027.

Add 2-1/2" to the X dimensions shown in the chart.

PARTS DRAWING – ISO 136 (POWER); ISO 180 (MANUAL)

Model Number For power rewind see Note 5	Hose Capacity of Reel feet m			Approx. Weight Crank Rewind lb. kg see Note 3			Reel Dimensions*** in. mm						
	I.D. in. mm O.D. in. mm	5/8 16 1 25	3/4 19 1-9/32 40	NET	UPS/ FedEx SHIP Wt.	Freight SHIP Wt.	A	B	E CRANK	E POWER	F CRANK	F POWER	X
1816-17-18		**75** 23	**50** 15	**28** 13	**80*** 36	**63** 29	**13** 330	**8** 203	**16.5** 419	**19** 483	**24.13** 613	**18.5** 470	**11.5** 292
1822-17-18		**150** 46	**100** 30	**30** 14	**98*** 45	**65** 29	**19** 483	**14** 356	**16.5** 419	**19** 483	**30.13** 765	**24.5** 622	**17.5** 445
1826-17-18		**200** 61	**125** 38	**32** 15	**98*** 45	**67** 30	**23** 584	**18** 457	**16.5** 419	**19** 483	**34.13** 867	**28.5** 724	**21.5** 546
1830-17-18		**250** 76	**150** 46	**33** 15	**110*** 50	**68** 31	**27** 686	**22** 559	**16.5** 419	**19** 483	**38.13** 968	**32.5** 826	**25.5** 648
1836-17-18		**300** 91	**200** 61	**36** 16	**129*** 59	**71** 32	**33** 838	**28** 711	**16.5** 419	**19** 483	**44.13** 1121	**38.5** 978	**31.5** 800

Notes:

1. Specifications subject to change.
2. Upon request, reels can be supplied with drum lengths other than shown.
3. Weights shown in chart are for crank rewind models. ADD these amounts for power rewind models (does not apply to FedEx or UPS):

	Net lbs/kg	Ship lbs/kg
Electric	**18**/8.2	**18**/8.2
Hydraulic	**15**/6.8	**15**/6.8
Air	**15**/6.8	**15**/6.8

4. Dimension "F" is the overall length of standard model reels.
5. When ordering power rewind models, prefix model number with:

A = Air Rewind – Supplied with control valve and 18" air hose.

E = Electric Rewind – 12v and 24v DC rewind reels are supplied with switch and solenoid; 115v AC rewind reels are not supplied with switch but can be ordered separately.

HD = Hydraulic Rewind – Not supplied with control valve.

6. Manual rewind available in RT or LB configurations only.
7. **Finish:** Refer to page 3.
8. **Be sure to check dimensions and weights prior to ordering.**
9. Some roller options may prohibit the use of our molded chain guard.

NOTICE: A flexible connector must be used between the inlet pipe and the inlet swivel joint.

* Dimensional weight applies when shipped as a parcel package (via FedEx or UPS Ground).

*** X, Y indicate mounting holes. See page 5.

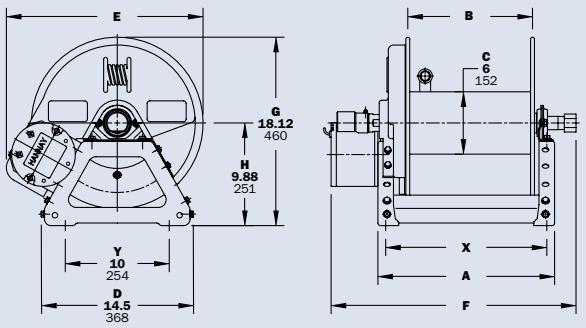

Power rewind shown

Series **2000** | Dual Hose

• Hydraulics • Spray Painting • Air/Water

To handle dual 1/4" through 1/2" I.D. hose.

- Two swivel joint inlets and two outlet risers to handle two equal lengths of hose.
- Chain-driven crank rewind or chain and sprocket rewind powered by an electric or compressed air motor.
- MX crank rewind reels have pinion brake as standard.
- Power rewind reels are not supplied with a brake.
- Standard inlets: 90° ball bearing swivel joints, 1/2" female NPT threads.
- Standard outlets: 1/2" female NPT threads.
- Standard pressures to 3000 psi (207 bar), available up to 10,000 psi (690 bar) – must specify.
- Temperatures from +20°F to +400°F (-7°C to +204°C).
- Reels for use with oxygen/acetylene. See Series 2400 Hannay Reels Welding Catalog H0408-W.

Electric rewind
Standard configuration shown

Optional External Mounting Brackets

Part No. 9906.0027.
Add 2-1/2" to the X dimensions shown in the chart.

PARTS DRAWING – ISO 112

Model Number For power rewind see Note 5	Hose Capacity of Reel feet m			Approx. Weight Crank Rewind3 lb. kg see Note 3			Reel Dimensions*** in. mm						
	I.D. in. mm	1/4 6	3/8 10	1/2 13	NET	UPS/ FedEx SHIP Wt.	Freight SHIP Wt.	A	B	E CRANK	E POWER	F CRANK	F POWER	X
	O.D. in. mm	5/8 16	3/4 19	7/8 22										
2016-17-18		**2/100**	**2/75**	**2/50**	**32**	**80***	**67**	**13**	**8**	**18.5**	**19**	**21**	**20**	**11.5**
		2/31	2/23	2/15	15	36	30	330	203	470	483	533	508	292
2020-17-18		**2/175**	**2/125**	**2/75**	**34**	**98***	**69**	**17**	**12**	**18.5**	**19**	**25**	**24**	**15.5**
		2/53	2/38	2/23	15	45	31	432	305	470	483	635	610	394
2026-17-18		**2/275**	**2/200**	**2/125**	**36**	**110***	**71**	**23**	**18**	**18.5**	**19**	**31**	**30**	**21.5**
		2/84	2/61	2/38	16	50	32	584	457	470	483	787	762	546
2030-17-18		**2/350**	**2/250**	**2/175**	**37**	**129***	**72**	**27**	**22**	**18.5**	**19**	**35**	**34**	**25.5**
		2/107	2/76	2/53	17	59	33	686	559	470	483	889	864	648
2036-17-18		**2/425**	**2/300**	**2/225**	**39**	**129***	**74**	**33**	**28**	**18.5**	**19**	**41**	**40**	**31.5**
		2/130	2/91	2/69	18	59	34	838	711	470	483	1041	1016	800

Notes:

1. Specifications subject to change.
2. Upon request, reels can be supplied with drum lengths other than shown.
3. Weights shown in chart are for crank rewind models. ADD these amounts for power rewind models (does not apply to FedEx or UPS):

	Net lbs/kg	Ship lbs/kg
Electric	**18**/8.2	**18**/8.2
Air	**15**/6.8	**15**/6.8

4. Dimension "F" is the overall length of standard model reels. MX chain-drive crank models require 2" clearance to remove crank handle.
5. When ordering power rewind models, prefix model number with:
   A = Air Rewind – Supplied with control valve and 18" air hose.
   E = Electric Rewind – 12v and 24v DC rewind reels are supplied with switch and solenoid; 115v AC rewind reels are not supplied with switch but can be ordered separately.
   MX = Chain-Driven Crank.
6. **Finish:** Refer to page 3.
7. **Be sure to check dimensions and weights prior to ordering.**
8. Some roller options may prohibit the use of our molded chain guard.

NOTICE: A flexible connector must be used between the inlet pipe and the inlet swivel joint.

* Dimensional weight applies when shipped as a parcel package (via FedEx or UPS Ground).

*** X, Y indicate mounting holes. See page 5.

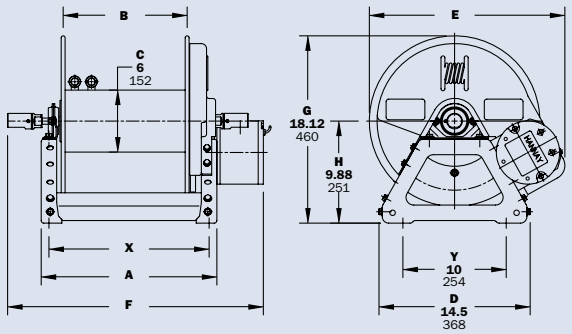

Power rewind shown

Hannay Reels, Inc. | Phone: 518-797-3791 | Toll Free: 1-877-467-3357 | Domestic FAX: 1-800-733-5464 | International FAX: 518-797-3259 | hannay.com | reels@hannay.com

Dual Hose | Series G2000

• Hydraulics • Spray Painting • Air/Water

To handle dual 1/4" through 1/2" I.D. hose.

- Two swivel joint inlets and two outlet risers to handle two equal lengths of hose.
- Gear-driven crank rewind.
- Pinion brake as standard.
- Standard inlets: 90° ball bearing swivel joints, 1/2" female NPT threads.
- Standard outlets: 1/2" female NPT threads.
- Standard pressures to 3000 psi (207 bar), available up to 10,000 psi (690 bar) – must specify.
- Temperatures from +20°F to +400°F (-7°C to +204°C).
- For power rewind, see Series 2000, page 20.
- Reels for use with oxygen/acetylene. See Series 2400 Hannay Reels Welding Catalog H0408-W.

Standard gear-driven crank rewind with optional finish shown

Optional External Mounting Brackets

Part No. 9906.0027.

Add 2-1/2" to the X dimensions shown in the chart.

PARTS DRAWING – ISO 205

Model Number	Hose Capacity of Reel feet m			Approx. Weight Crank Rewind lb. kg			Reel Dimensions*** in. mm			
	I.D. in. / mm	1/4 / 6	3/8 / 10	1/2 / 13	NET	UPS/ FedEx SHIP Wt.	Freight SHIP Wt.	A	B	F	X
	O.D. in. / mm	5/8 / 16	3/4 / 19	7/8 / 22							
G2016-17-18-8		**2/75**	**2/50**	**2/35**	**40**	**80***	**75**	**13**	**8**	**21**	**11.5**
		2/23	2/15	2/11	15	36	34	330	203	533	292
G2020-17-18-8		**2/125**	**2/100**	**2/50**	**42**	**98***	**77**	**17**	**12**	**25**	**15.5**
		2/38	2/31	2/15	18	45	35	432	305	635	394
G2026-17-18-8		**2/200**	**2/150**	**2/100**	**44**	**110***	**79**	**23**	**18**	**31**	**21.5**
		2/61	2/46	2/31	19	50	36	584	457	787	546

Notes:

1. Specifications subject to change.
2. Upon request, reels can be supplied with drum lengths other than shown.
3. **Finish:** Refer to page 3.
4. **Be sure to check dimensions and weights prior to ordering.**

NOTICE: A flexible connector must be used between the inlet pipe and the inlet swivel joint.

* Dimensional weight applies when shipped as a parcel package (via FedEx or UPS Ground).

*** X, Y indicate mounting holes. See page 5.

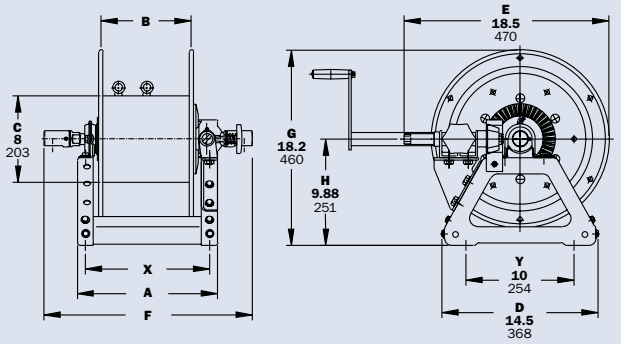

Series **3000**

- **Fuel Dispensing** (Consult Factory) • **Spray Operations**
- **Fire Protection**

To handle 3/4" or 1" I.D. hose.

- Economical manual rewind reels for long lengths of hose.
- Choose disc rewind or removable direct crank rewind.
- Supplied with spring actuated pin lock.
- Standard inlet: 90° ball bearing swivel joint, 1" female NPT threads.
- Standard outlet: 1" female NPT thread.
- Standard: inlet, outlet riser, and hub assembly are steel. Options: swivel joint also available in aluminum or stainless steel. Riser and hub assembly also available in stainless steel.
- Standard pressures to 2000 psi (138 bar), available up to 4000 psi (276 bar) – must specify.
- Temperatures from -60°F to +250°F (-51°C to +121°C).
- Rollers and roller mounting brackets are accessory items. Specify roller position.

Standard configuration with crank handle shown

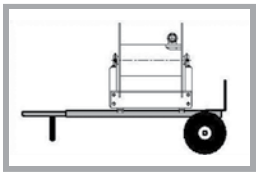

Optional Aluminum Hand Cart

4300-AL mounting available.

PARTS DRAWING – ISO 113

Model Number	Hose Capacity of Reel feet m		Approx. Weight Crank Rewind lb. kg		Reel Dimensions*** in. mm			
I.D. in. / mm	3/4 / 19	1 / 25	NET	SHIP	A	B	F	X
O.D. in. / mm	1-9/32 / 33	1-1/2 / 38						
3016-25-26	**100** / 30	**75** / 23	**85** / 39	**120** / 54	**13** / 330	**7.5** / 191	**24.5** / 622	**7.75** / 197
3020-25-26	**150** / 46	**100** / 30	**94** / 43	**129** / 59	**17** / 432	**11.5** / 292	**28.5** / 724	**9** / 229
3024-25-26	**200** / 61	**125** / 38	**103** / 47	**138** / 63	**21** / 533	**15.5** / 394	**32.5** / 826	**13** / 330
3028-25-26	**275** / 84	**175** / 53	**113** / 51	**155** / 70	**25.5** / 648	**20** / 508	**37** / 940	**17.5** / 445

Notes:

1. Specifications subject to change.
2. Upon request, reels can be supplied with drum lengths other than shown and with disc sizes in other diameters.
3. **Power rewind NOT available on these models.**
4. Dimension "F" is the overall length of standard model reels. For crank rewind models, 3-1/2" clearance is required to remove crank.
5. Subtract 5" from "F" dimension for disc rewind models.
6. **Finish:** Call factory for offshore/marine finish, available at extra cost. Refer to page 3.
7. **Be sure to check dimensions and weights prior to ordering.**

NOTICE: A flexible connector must be used between the inlet pipe and the inlet swivel joint.

*** X, Y indicate mounting holes. See page 5.

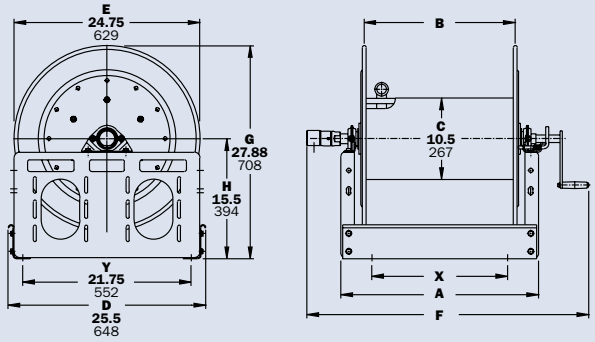

Hannay Reels, Inc. | Phone: **518-797-3791** Toll Free: **1-877-467-3357** | Domestic FAX: **1-800-733-5464** International FAX: **518-797-3259** | **hannay.com** **reels@hannay.com**

Series **3500**

• Fuel Dispensing (Consult Factory) **• Bulk Transfer**
• Fire Protection

To handle 1-1/4" or 1-1/2" I.D. hose.

- Economical manual rewind reels for long lengths of hose.
- Choose disc rewind or removable direct crank rewind.
- Supplied with spring actuated pin lock.
- Standard inlet: 90° ball bearing swivel joint, 1-1/2" female NPT threads, and 2" Victaulic® groove.
- Standard outlet: flanged riser with 1-1/2" female NPT threads.
- Standard: inlet, outlet riser, and hub assembly are steel. Options: also available in aluminum or stainless steel.
- Standard pressures to 600 psi (41 bar), available up to 1000 psi (69 bar) – must specify.
- Temperatures from -25°F to +250°F (-32°C to +121°C).
- Rollers and roller mounting brackets are accessory items. Specify roller position.

Standard configuration shown

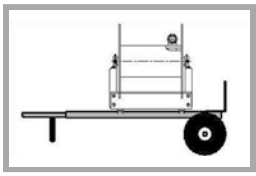

Optional Aluminum Hand Cart

4300-AL mounting available.

PARTS DRAWING – ISO 111

Model Number	Hose Capacity of Reel feet m		Approx. Weight Crank Rewind lb. kg		Reel Dimensions*** in. mm						
I.D. in. mm	1-1/4 32	1-1/2 38	NET	SHIP	A	B	E	F	G	H	X
O.D. in. mm	1-13/16 46	2-1/16 52									
3520-25-26	**75** 23	**50** 15	**104** 47	**139** 63	**17** 432	**11.5** 292	**24.75** 629	**30.75** 781	**27.88** 708	**15.5** 394	**9** 229
3524-25-26	**100** 30	**75** 23	**113** 51	**157** 71	**21** 533	**15.5** 394	**24.75** 629	**34.75** 883	**27.88** 708	**15.5** 394	**13** 330
3528-25-26	**150** 46	**100** 30	**123** 56	**173** 78	**25.5** 648	**20** 508	**24.75** 629	**39.25** 997	**27.88** 708	**15.5** 394	**17.5** 445
3524-30-31	**150** 46	**100** 30	**124** 56	**174** 79	**21** 533	**15.5** 394	**28.75** 730	**34.75** 883	**29.88** 759	**15.5** 394	**13** 330
3528-30-31	**200** 61	**150** 46	**134** 61	**184** 83	**25.5** 648	**20** 508	**28.75** 730	**39.25** 997	**29.88** 759	**15.5** 394	**17.5** 445
3534-30-31	**–** –	**200** 61	**147** 67	**197** 89	**31.5** 800	**26** 660	**28.75** 730	**45.25** 1149	**29.88** 759	**15.5** 394	**23.5** 597
3530-33-34	**–** –	**250** 76	**138** 63	**188** 85	**27.5** 699	**22** 559	**31.75** 806	**41.25** 1048	**32.38** 822	**16.5** 419	**19.5** 495

Notes:

1. Specifications subject to change.
2. Upon request, reels can be supplied with drum lengths other than shown and with disc sizes in other diameters.
3. **Power rewind NOT available on these models.**
4. Dimension "F" is the overall length of standard model reels. For crank rewind models, 3-1/2" clearance is required to remove crank.
5. Subtract 5" from "F" dimension for disc rewind models.
6. **Finish:** Call factory for offshore/marine finish, available at extra cost. Refer to page 3.
7. **Be sure to check dimensions and weights prior to ordering.**

NOTICE: A flexible connector must be used between the inlet pipe and the inlet swivel joint.

*** X, Y indicate mounting holes. See page 5.

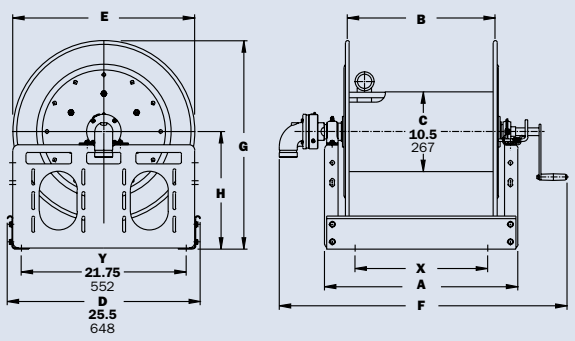

Series **4000**

- **Fuel Dispensing** (Consult Factory) • **Water Supply**
- **Fire Protection** • **Chemical Transfer**

To handle single 3/4" or 1" I.D. hose.

- Lightweight, compact reels designed for long lengths of hose in manual and power rewind.
- Manual rewind reels include: cam-lock drag brake, spring actuated pin lock and removable direct crank rewind.
- Power rewind reels include: chain and sprocket drive powered by electric, hydraulic or air. Strap brake is standard.
- Standard inlet: 90° ball bearing swivel joint, 1" female NPT threads.
- Standard outlet: 1" female NPT threads.
- Standard pressures to 2000 psi (138 bar), available up to 4000 psi (276 bar) – must specify.
- Temperatures from -60°F to +250°F (-51°C to +121°C).
- Rollers and roller mounting brackets are accessory items. Specify roller position.

Electric rewind
Standard configuration shown

Optional External Mounting Brackets

Part No. 9906.0027.

Add 2-1/2" to the X dimensions shown in the chart.

PARTS DRAWING – ISO 68

Model Number (For power rewind see Note 5)	Hose Capacity of Reel feet m			Approx. Weight Crank Rewind lb. kg see Note 3			Reel Dimensions*** in. mm						
	I.D. in. mm	3/4 19	1 25	NET	UPS/ FedEx SHIP Wt.	Freight SHIP Wt.	A	B	E CRANK	E POWER	F CRANK	F POWER	X
	O.D. in. mm	1-9/32 33	1-1/2 38										
4018-17-18		**50** 15	**35** 11	**36** 16	**80*** 36	**71** 32	**15** 381	**10** 254	**16.5** 419	**19** 483	**27.75** 705	**20.5** 521	**13.5** 343
4024-17-18		**100** 30	**50** 15	**46** 21	**98*** 45	**81** 37	**21** 533	**16** 406	**16.5** 419	**19** 483	**33.75** 857	**26.5** 673	**19.5** 495
4030-17-18		**150** 46	**75** 23	**57** 26	**110*** 50	**92** 42	**27** 686	**22** 559	**16.5** 419	**19** 483	**39.75** 1010	**32.5** 826	**25.5** 648
4038-17-18		**200** 61	**100** 30	**70** 32	**–** –	**124** 56	**35** 889	**30** 762	**16.5** 419	**19** 483	**47.75** 1213	**40.5** 1029	**33.5** 851

Notes:

1. Specifications subject to change.
2. Upon request, reels can be supplied with drum lengths other than shown.
3. Weights shown in chart are for crank rewind models. ADD these amounts for power rewind models (does not apply to FedEx or UPS):

	Net lbs/kg	Ship lbs/kg
Electric	**18**/8.2	**18**/8.2
Hydraulic	**15**/6.8	**15**/6.8
Air	**15**/6.8	**15**/6.8

4. Dimension "F" is the overall length of standard model reels. Crank rewind reels require 3-1/2" clearance to remove or install crank handle.
5. When ordering power rewind models, prefix model number with:
   A = Air Rewind – Supplied with control valve and 18" air hose.
   E = Electric Rewind – 12v and 24v DC rewind reels are supplied with switch and solenoid; 115v AC rewind reels are not supplied with switch but can be ordered separately.
   HD = Hydraulic Rewind – Not supplied with control valve.
6. **Finish:** Refer to page 3.
7. **Be sure to check dimensions and weights prior to ordering.**
8. Some roller options may prohibit the use of our molded chain guard.

NOTICE: A flexible connector must be used between the inlet pipe and the inlet swivel joint.

* Dimensional weight applies when shipped as a parcel package (via FedEx or UPS Ground).

*** X, Y indicate mounting holes. See page 5. (Also applies for external mounting brackets.)

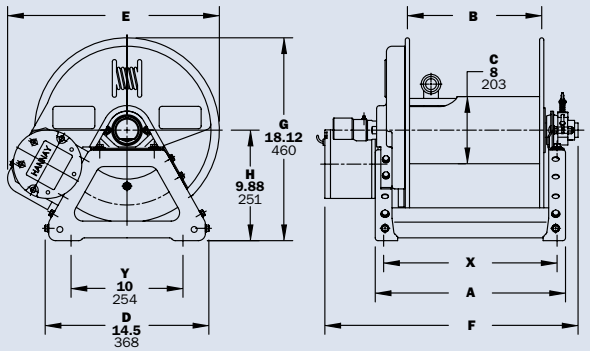

Power rewind shown

Hannay Reels, Inc. | Phone: 518-797-3791 | Toll Free: 1-877-467-3357 | Domestic FAX: 1-800-733-5464 | International FAX: 518-797-3259 | hannay.com | reels@hannay.com

Series **4100**

• Fuel Dispensing (Consult Factory) • Water Supply
• Fire Protection • Chemical Transfer

To handle single 3/4" or 1" I.D. hose.

- Lightweight, compact reels designed for long lengths of hose in manual and power rewind.
- Manual rewind reels include: gear-driven crank rewind with removable handle and adjustable brake.
- Power rewind reels include: chain and sprocket drive powered by electric, hydraulic or air motor.
- Standard inlet: 90° ball bearing swivel joint, 1" female NPT threads.
- Standard outlet: 1" female NPT threads.
- Standard pressures to 2000 psi (138 bar), available up to 4000 psi (276 bar) – must specify.
- Temperatures from -60°F to +250°F (-51°C to +121°C).
- Rollers and roller mounting brackets are accessory items. Specify roller position.

Electric rewind with gear-driven crank rewind and optional finish shown

PARTS DRAWING – ISO 206

Model Number For power rewind see Note 5	Hose Capacity of Reel feet m		Approx. Weight Crank Rewind lb. kg see Note 3		Reel Dimensions*** in. mm					
I.D. in. mm / O.D. in. mm	3/4 19 / 1-9/32 33	1 25 / 1-1/2 38	NET	SHIP	A	B	E CRANK	E POWER	F	X
4118-17-18	**50** 15	**35** 11	**62** 28	**97** 44	**15** 381	**10** 254	**18** 457	**20.5** 521	**21.5** 546	**7.5** 190
4124-17-18	**100** 30	**50** 15	**72** 33	**107** 49	**21** 533	**16** 406	**18** 457	**20.5** 521	**27.5** 699	**13.5** 343
4130-17-18	**150** 46	**75** 23	**83** 38	**118** 54	**27** 686	**22** 559	**18** 457	**20.5** 521	**33.5** 851	**19.5** 495
4138-17-18	**200** 61	**100** 30	**96** 44	**131** 59	**35** 889	**30** 762	**18** 457	**20.5** 521	**41.5** 1054	**27.5** 698

Notes:

1. Specifications subject to change.
2. Upon request, reels can be supplied with drum lengths other than shown.
3. Weights shown in chart are for crank rewind models. ADD these amounts for power rewind models:

	Net lbs/kg	Ship lbs/kg
Electric	**18**/8.2	**18**/8.2
Hydraulic	**15**/6.8	**15**/6.8
Air	**15**/6.8	**15**/6.8

4. Dimension "F" is the overall length of standard model reels.
5. When ordering standard gear rewind models, prefix model number with:
   G = Gear Rewind.

When ordering power rewind models, prefix model number with:

A = Air Rewind –
Supplied with control valve and 18" air hose.
E = Electric Rewind –
12v and 24v DC rewind reels are supplied with switch and solenoid; 115v AC rewind reels are not supplied with switch but can be ordered separately.
HD = Hydraulic Rewind –
Not supplied with control valve.

6. **Finish:** Refer to page 3.
7. **Be sure to check dimensions and weights prior to ordering.**

NOTICE: A flexible connector must be used between the inlet pipe and the inlet swivel joint.

*** X, Y indicate mounting holes. See page 5.

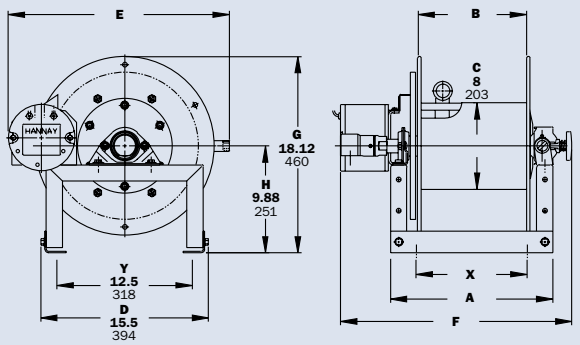

Power rewind shown

Series **6000**

• Fuel Dispensing (Consult Factory) • Fire Protection
• Spray Operations • Water Blasting* • Sewer Cleaning*

To handle single 1/2" through 1" I.D. hose.

- Heavy-duty reel for longer lengths of hose.
- Choose gear-driven crank rewind or chain and sprocket drive powered by an electric, hydraulic or compressed air motor.
- Crank rewind reels supplied with pinion brake; power rewind reels with a strap brake.
- Standard inlet: 90° ball bearing swivel joint, 1" female NPT threads.
- Standard outlet: 1" female NPT threads.
- Standard: inlet, outlet riser, and hub assembly are steel. Options: swivel joint also available in aluminum or stainless steel. Riser and hub assembly also available in stainless steel.
- Standard pressures to 2000 psi (138 bar), available up to 5000 psi (345 bar) – must specify.
- Temperatures from -60°F to +250°F (-51°C to +121°C).
- Rollers and roller mounting brackets are accessory items. Specify roller position.
- Consult factory for optional chain guard.

* Heavy-duty construction required for water blasting and sewer cleaning applications. Consult factory.

Optional Auxiliary Rewind

Ring and pinion shaft rewind unit with removable crank handle.

Electric rewind
Standard configuration shown

Optional Assembly
C2 roller top wind and auxiliary rewind shown

Hannay Reels, Inc.
Phone: **518-797-3791**
Toll Free: **1-877-467-3357**
Domestic FAX: **1-800-733-5464**
International FAX: **518-797-3259**
hannay.com
reels@hannay.com

Series 6000

• **Fuel Dispensing** (Consult Factory) • **Fire Protection**
• **Spray Operations** • **Water Blasting*** • **Sewer Cleaning***

PARTS DRAWING – ISO 84

Model Number For power rewind see Note 5	Hose Capacity of Reel feet m			Approx. Weight Crank Rewind lb. kg see Note 4		Reel Dimensions*** in. mm									
I.D. in. mm / O.D. in. mm	1/2 13 / 7/8 22	3/4 19 / 1-9/32 33	1 25 / 1-1/2 38	NET	SHIP	A	B	D	E	F CRANK	F POWER	G	H	X	Y
6024-19-21	**200** 61	**100** 30	**60** 18	**85** 39	**127** 58	**21** 533	**15.5** 394	**20.5** 521	**18.75** 476	**25.38** 645	**28.5** 724	**21.5** 546	**12.12** 308	**13** 330	**16.75** 425
6032-19-21	**325** 99	**175** 53	**85** 26	**102** 46	**144** 65	**29.5** 749	**24** 610	**20.5** 521	**18.75** 476	**33.88** 861	**37** 940	**21.5** 546	**12.12** 308	**21.5** 546	**16.75** 425
6024-23-24	**400** 122	**150** 46	**125** 38	**92** 42	**134** 61	**21** 533	**15.5** 394	**20.5** 521	**22.75** 578	**25.38** 645	**28.5** 724	**23.5** 597	**12.12** 308	**13** 330	**16.75** 425
6030-23-24	**–** –	**225** 68	**200** 61	**105** 48	**147** 67	**27.5** 699	**22** 559	**20.5** 521	**22.75** 578	**31.88** 810	**35** 889	**23.5** 597	**12.12** 308	**19.5** 495	**16.75** 425
6038-23-24	**–** –	**300** 91	**250** 76	**120** 54	**162** 73	**35** 889	**29.5** 749	**20.5** 521	**22.75** 578	**39.38** 1000	**42.5** 1080	**23.5** 597	**12.12** 308	**27** 686	**16.75** 425
6016-25-26	**250** 76	**100** 30	**75** 23	**88** 40	**130** 59	**13** 330	**7.5** 191	**25.5** 648	**24.75** 629	**17.38** 441	**20.5** 521	**27.88** 708	**15.5** 394	**7.75** 197	**21.75** 552
6022-25-26	**450** 137	**175** 84	**125** 38	**100** 45	**142** 64	**19** 483	**13.5** 343	**25.5** 648	**24.75** 629	**23.38** 594	**26.5** 673	**27.88** 708	**15.5** 394	**11** 279	**21.75** 552
6028-25-26	**–** –	**275** 84	**175** 53	**113** 51	**155** 70	**25.5** 648	**20** 508	**25.5** 648	**24.75** 629	**29.88** 759	**33** 838	**27.88** 708	**15.5** 394	**17.5** 445	**21.75** 552
6018-30-31	**400** 122	**200** 61	**150** 46	**101** 46	**151** 68	**15** 381	**9.5** 241	**25.5** 648	**28.75** 730	**19.38** 492	**22.5** 572	**29.88** 759	**15.5** 394	**7** 178	**21.75** 552
6024-30-31	**–** –	**350** 107	**250** 76	**113** 51	**163** 74	**21** 533	**15.5** 394	**25.5** 648	**28.75** 730	**25.38** 645	**28.5** 724	**29.88** 759	**15.5** 394	**13** 330	**21.75** 552
6028-30-31	**–** –	**–** –	**300** 91	**121** 55	**171** 78	**25.5** 648	**20** 508	**25.5** 648	**28.75** 730	**29.88** 759	**33** 838	**29.88** 759	**15.5** 394	**17.5** 445	**21.75** 552
†6028-33-34	**–** –	**–** –	**400** 122	**129** 59	**179** 81	**25** 635	**20** 508	**31.5** 800	**31.75** 806	**29.62** 752	**32.75** 832	**33.62** 854	**17.75** 451	**17.5** 445	**27.75** 705

Notes:

1. Specifications subject to change.
2. Upon request, reels can be supplied with drum lengths other than shown and with disc sizes in other diameters.
3. Dimensions shown for reels up to and including 30-31 disc size reflect pressed frames. All others are rollformed channel frames.
4. Weights shown in chart are for crank rewind models. ADD these amounts for power rewind models.

	Net lbs/kg	Ship lbs/kg
Electric	**40**/18.1	**40**/18.1
Hydraulic	**20**/9.1	**20**/9.1
Air	**20**/9.1	**20**/9.1

5. When ordering power rewind models, prefix model number with:
   A = Air Rewind – Supplied with control valve and 18" air hose.
   EP = Electric Rewind (1/2 HP) – 12v and 24v DC rewind reels are supplied with switch and solenoid; 115v AC rewind reels are not supplied with switch but can be ordered separately.
   HD = Hydraulic Rewind – Not supplied with control valve.
6. **Finish:** Refer to page 3.
7. **Be sure to check dimensions and weights prior to ordering.**

NOTICE: A flexible connector must be used between the inlet pipe and the inlet swivel joint.

*** X, Y indicate mounting holes. See page 5.

† Some applications require a clutch/reduction unit.

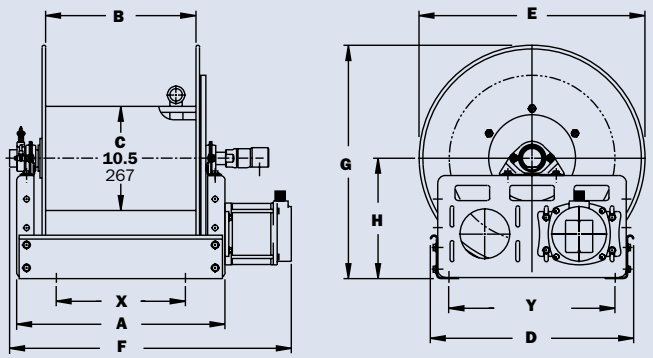

Power rewind shown

Series **7000** | Dual Hose

• Hydraulics • Dual Agents

To handle dual 3/4" or 1" I.D. hose.

- Two swivel joint inlets and two outlet risers to handle two equal lengths of hose.
- Choose gear-driven crank rewind or chain and sprocket drive powered by an electric, hydraulic or compressed air motor. An auxiliary rewind is standard.
- Crank rewind and power rewind reels, pinion brake is standard.
- Standard inlets: 90° ball bearing swivel joints, 1" female NPT threads.
- Standard outlets: 1" female NPT threads.
- Standard: inlet, outlet riser, and hub assembly are steel. Options: swivel joint also available in aluminum or stainless steel. Riser and hub assembly also available in stainless steel.
- Standard pressures to 2000 psi (138 bar), available up to 5000 psi (345 bar) – must specify.
- Temperatures from -60°F to +250°F (-51°C to +121°C).
- Consult factory for optional chain guard.

Standard configuration shown

PARTS DRAWING – ISO 72

Model Number For power rewind see Note 5	Hose Capacity of Reel feet m		Approx. Weight Crank Rewind lb. kg see Note 4		Reel Dimensions*** in. mm									
I.D. in. mm	3/4 19	1 25	NET	Freight SHIP Wt.	A	B	D	E	F CRANK	F POWER	G	H	X	Y
O.D. in. mm	1-9/32 33	1-1/2 38												
7024-19-21	**2/60**	**2/25**	**100**	**142**	**21**	**15.5**	**20.5**	**21.88**	**29.75**	**32.12**	**21.5**	**12.12**	**13**	**16.75**
	2/18	2/8	45	64	533	394	521	556	756	816	546	308	330	425
7026-23-24	**2/90**	**2/50**	**105**	**147**	**23**	**17.5**	**20.5**	**23**	**31.75**	**34.12**	**23.5**	**12.12**	**15**	**16.75**
	2/27	2/15	48	67	584	445	521	584	806	867	597	308	381	425
7032-25-26	**2/175**	**2/100**	**129**	**179**	**29.5**	**24**	**25.5**	**24.75**	**38.25**	**40.62**	**27.88**	**15.5**	**21.5**	**21.75**
	2/53	2/31	59	81	749	610	648	629	972	1032	708	394	546	552
†7032-30-31	**2/300**	**2/175**	**137**	**187**	**29.5**	**24**	**25.5**	**28.75**	**38.25**	**40.62**	**29.88**	**15.5**	**21.5**	**21.75**
	2/91	2/53	62	85	749	610	648	730	972	1032	759	394	546	552
†7024-33-34	**2/225**	**2/150**	**120**	**170**	**20.5**	**15.5**	**31.5**	**31.75**	**29.75**	**32.12**	**33.62**	**17.75**	**13**	**27.75**
	2/69	2/46	54	77	521	394	800	806	756	816	854	451	330	705
†7032-33-34	**2/350**	**2/225**	**137**	**187**	**29**	**24**	**31.5**	**31.75**	**38.25**	**40.62**	**33.62**	**17.75**	**21.5**	**27.75**
	2/107	2/69	62	85	737	610	800	806	972	1032	854	451	546	705

Notes:

1. Specifications subject to change.
2. Upon request, reels can be supplied with drum lengths other than shown and with disc sizes in other diameters.
3. Dimensions shown for reels up to and including 30-31 disc size reflect pressed frames. All others are rollformed channel frames.
4. Weights shown in chart are for crank rewind models. ADD these amounts for power rewind models.

	Net lbs/kg	Ship lbs/kg
Electric	**40**/18.1	**40**/18.1
Hydraulic	**20**/9.1	**20**/9.1
Air	**20**/9.1	**20**/9.1

5. When ordering, prefix model number with:
   - **A** = Air Rewind – Supplied with control valve and 18" air hose.
   - **EP** = Electric Rewind (1/2 HP) – 12v and 24v DC rewind reels are supplied with switch and solenoid; 115v AC rewind reels are not supplied with switch but can be ordered separately.
   - **HD** = Hydraulic Rewind – Not supplied with control valve.
   - **MX** = Chain-Driven Crank.
6. **Finish:** Refer to page 3.
7. **Be sure to check dimensions and weights prior to ordering.**

NOTICE: A flexible connector must be used between the inlet pipe and the inlet swivel joint.

*** X, Y indicate mounting holes. See page 5.

† Some applications require a clutch/reduction unit.

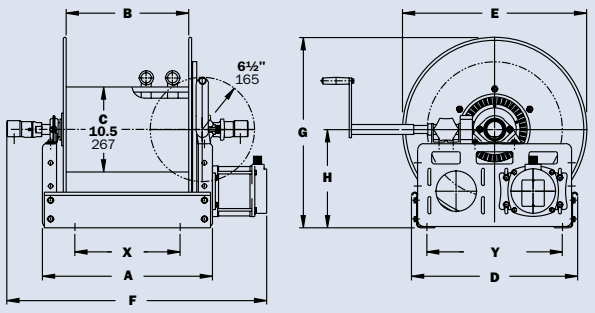

Power rewind shown

Hannay Reels, Inc. | Phone: 518-797-3791 | Toll Free: 1-877-467-3357 | Domestic FAX: 1-800-733-5464 | International FAX: 518-797-3259 | hannay.com | reels@hannay.com

Series 7500

• **Fuel Dispensing** (Consult Factory) • **Bulk Transfer**
• **Suction/Discharge** (Consult Factory)

To handle single 1-1/4" or 1-1/2" I.D. hose.

- Choose gear-driven crank rewind or chain and sprocket drive powered by an electric, hydraulic or compressed air motor.
- Crank rewind reels supplied with pinion brake and power rewind reels with a strap brake.
- Standard inlet: 90° ball bearing swivel joint, 1-1/2" female NPT threads, and 2" Victaulic® groove.
- Standard outlet: flanged riser, 1-1/2" female NPT threads.
- Standard: inlet, outlet riser, and hub assembly are steel. Options: also available in aluminum or stainless steel.
- Standard pressures to 600 psi (41 bar), available up to 1000 psi (69 bar) – must specify.
- Temperatures from -25°F to +250°F (-32°C to +121°C), optional temperatures to +400°F (+204°C) – must specify.
- Rollers and roller mounting brackets are accessory items. Specify roller position.
- Consult factory for optional chain guard.

Standard configuration shown

Optional Auxiliary Rewind

Ring and pinion shaft rewind unit with removable crank handle.

PARTS DRAWING – ISO 18

Model Number For power rewind see Note 5	Hose Capacity of Reel feet m		Approx. Weight Crank Rewind lb. kg see Note 4		Reel Dimensions*** in. mm									
I.D. in. mm	1-1/4 32	1-1/2 38	NET	SHIP	A	B	D	E	F CRANK	F POWER	G	H	X	Y
O.D. in. mm	1-13/16 46	2-1/16 52												
7528-19-21	**70** 21	**50** 15	**104** 47	**146** 66	**25.5** 648	**20** 508	**20.5** 521	**18.75** 476	**32** 813	**33** 838	**21.5** 546	**12.12** 308	**17.5** 445	**16.75** 425
7538-23-24	**175** 53	**100** 30	**130** 59	**172** 78	**35** 889	**29.5** 749	**20.5** 521	**22.75** 578	**41.5** 1054	**42.5** 1080	**23.5** 597	**12.12** 308	**27** 686	**16.75** 425
7520-25-26	**75** 23	**50** 15	**106** 48	**148** 67	**17** 432	**11.5** 292	**25.5** 648	**24.75** 629	**23.5** 597	**24.5** 622	**27.88** 708	**15.5** 394	**9** 229	**21.75** 552
7528-25-26	**150** 46	**100** 30	**123** 56	**165** 75	**25.5** 648	**20** 508	**25.5** 648	**24.75** 629	**32** 813	**33** 838	**27.88** 708	**15.5** 394	**17.5** 445	**21.75** 552
7522-30-31	**125** 38	**100** 30	**118** 54	**168** 76	**19** 483	**13.5** 343	**25.5** 648	**28.75** 730	**25.5** 648	**26.5** 673	**29.88** 759	**15.5** 394	**11** 279	**21.75** 552
†7528-30-31	**200** 61	**150** 46	**131** 59	**181** 82	**25.5** 648	**20** 508	**25.5** 648	**28.75** 730	**32** 813	**33** 838	**29.88** 759	**15.5** 394	**17.5** 445	**21.75** 552
†7526-33-34	**200** 61	**175** 53	**133** 60	**183** 83	**22.5** 572	**17.5** 445	**31.5** 800	**31.75** 806	**29.25** 743	**30.25** 768	**33.62** 854	**17.75** 451	**15** 381	**27.75** 705

Notes:

1. Specifications subject to change.
2. Upon request, reels can be supplied with drum lengths other than shown and with disc sizes in other diameters.
3. Dimensions shown for reels up to and including 30-31 disc size reflect pressed frames. All others are rollformed channel frames.
4. Weights shown in chart are for crank rewind models. ADD these amounts for power rewind models.

	Net lbs/kg	Ship lbs/kg
Electric	**40**/18.1	**40**/18.1
Hydraulic	**20**/9.1	**20**/9.1
Air	**20**/9.1	**20**/9.1

5. When ordering, prefix model number with:
   A = Air Rewind – Supplied with control valve and 18" air hose.
   EP = Electric Rewind (1/2 HP) – 12v and 24v DC rewind reels are supplied with switch and solenoid; 115v AC rewind reels are not supplied with switch but can be ordered separately.
   HD = Hydraulic Rewind – Not supplied with control valve.
6. **Finish:** Refer to page 3.
7. **Be sure to check dimensions and weights prior to ordering.**

NOTICE: A flexible connector must be used between the inlet pipe and the inlet swivel joint.

*** X, Y indicate mounting holes. See page 5.

†Some applications require a clutch/reduction unit.

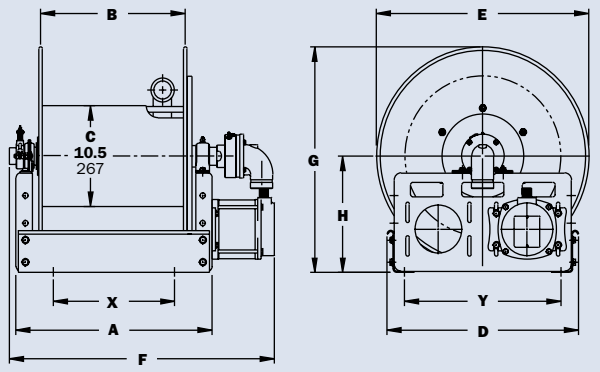

Power rewind shown

Series **8000**

- **Bulk Transfer • Fueling Applications** (Consult Factory)
- **Chemical Transfer • General Dispensing • Suction/Discharge** (Consult Factory)

To handle single 1-1/2" or 2" I.D. hose.

- Heavy-duty reel designed for longer lengths and larger diameters of hose through 2" I.D.
- Choose gear-driven crank rewind or chain and sprocket drive powered by an electric, hydraulic or compressed air motor.
- Crank rewind reels supplied with a pinion brake; power rewind reels with a strap brake.
- Standard inlet: 90° ball bearing swivel joint, 2" female NPT threads.
- Standard outlet: flanged riser, 2" female NPT threads.
- Standard: inlet, outlet riser, and hub assembly are steel. Options: also available in aluminum or stainless steel.
- Pressures to 600 psi (41 bar).
- Temperatures from -25°F to +250°F (-32°C to +121°C), optional temperatures to +400°F (+204°C) – must specify.
- Consult factory for other pressures and temperatures.
- Rollers and roller mounting brackets are accessory items. Specify roller position.
- Consult factory for optional chain guard.

Standard configuration shown

Chain Clutch-Reduction Units

For use on power reels with disc diameter 39" or larger and/or when increased torque and slower rewind speeds are required. Factory installed when specified or available as an accessory item.

PARTS DRAWING – ISO 35

Model Number For power rewind see Note 4	Hose Capacity of Reel feet m			Approx. Weight Crank Rewind lb. kg see Note 3		Reel Dimensions*** in. mm									
	I.D. in. mm	1-1/2 38	2 51	NET	SHIP	A	B	D	E	F CRANK	F POWER	G	H	X	Y
	O.D. in. mm	2-1/16 52	2-9/16 65												
8234-26-27		**80** 24	**60** 18	**120** 54	**170** 77	**26.25** 667	**20** 508	**27** 686	**25.75** 654	**33.75** 857	**34.75** 883	**26.62** 676	**13.75** 349	**18.75** 476	**23.25** 591
8238-26-27		**100** 30	**75** 23	**145** 66	**195** 88	**30.25** 768	**24** 610	**27** 686	**25.75** 654	**37.75** 959	**38.75** 984	**26.62** 676	**13.75** 349	**22.75** 578	**23.25** 591
8246-26-27		**145** 44	**100** 30	**196** 89	**245** 112	**38.25** 972	**32** 813	**27** 686	**25.75** 654	**45.75** 1162	**46.75** 1188	**26.62** 676	**13.75** 349	**30.75** 781	**23.25** 591
8226-33-34		**85** 26	**60** 18	**80** 36	**150** 68	**17.75** 451	**11.5** 292	**31.5** 800	**31.75** 806	**25.25** 641	**26.25** 667	**33.38** 848	**17.75** 445	**10.25** 260	**27.75** 705
8234-33-34		**150** 46	**115** 35	**133** 60	**230** 105	**26.25** 667	**20** 508	**31.5** 800	**31.75** 806	**33.75** 857	**34.75** 883	**33.38** 848	**17.75** 445	**18.75** 476	**27.75** 705
8238-39-40		**340** 104	**225** 69	**218** 99	**420** 191	**30.25** 768	**24** 610	**40** 1016	**39** 991	**37.75** 959	**38.75** 984	**39.88** 1013	**20.38** 518	**22.75** 578	**37** 940

Notes:

1. Specifications subject to change.
2. Upon request, reels can be supplied with drum lengths other than shown and with disc sizes in other diameters.
3. Weights shown in chart are for crank rewind models. ADD these amounts for power rewind models.

	Net lbs/kg	Ship lbs/kg
Electric	**40**/18.1	**40**/18.1
Hydraulic	**20**/9.1	**20**/9.1
Air	**20**/9.1	**20**/9.1

4. When ordering power rewind models, prefix model number with:
   A = Air Rewind – Supplied with control valve and 25" air hose.
   EP = Electric Rewind (1/2 HP) – 12v and 24v DC rewind reels are supplied with switch and solenoid; 115v AC rewind reels are not supplied with switch but can be ordered separately.
   HD = Hydraulic Rewind – Not supplied with control valve.
5. **Finish:** Refer to page 3.
6. **Be sure to check dimensions and weights prior to ordering.**

NOTICE: A flexible connector must be used between the inlet pipe and the inlet swivel joint.

*** X, Y indicate mounting holes. See page 5.

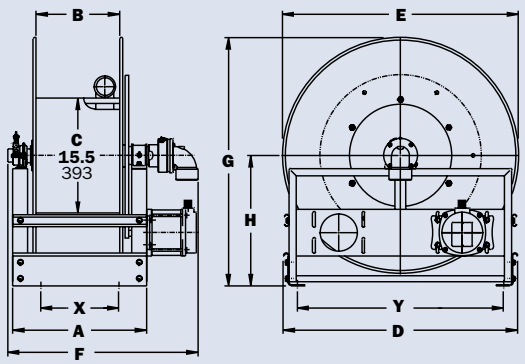

Power rewind shown

Hannay Reels, Inc. | Phone: 518-797-3791 | Toll Free: 1-877-467-3357 | Domestic FAX: 1-800-733-5464 | International FAX: 518-797-3259 | hannay.com | reels@hannay.com

Series 9000

• Fueling Applications (Consult Factory) **• Bulk Transfer**
• Suction/Discharge (Consult Factory) **• High Volume Application • Chemical Transfer**

To handle 2-1/2" or 3" I.D. hose.

- Heavy-duty reel designed for longer lengths and larger diameters of hose through 3" I.D.
- Choose gear-driven crank rewind or chain and sprocket drive powered by an electric, hydraulic or compressed air motor.
- Crank rewind reels supplied with a pinion brake; power rewind reels with a strap brake.
- Standard inlet: 90° ball bearing swivel joint, 3" female NPT threads.
- Standard outlet: flanged riser, 3" female NPT threads.
- Standard: outlet riser, and hub assembly are aluminum with ductile inlet.
  Options: swivel joint also available in aluminum or stainless steel. Riser and hub assembly also available in stainless steel.
- Pressures to 300 psi (21 bar).
- Temperatures from -50°F to +180°F (-45°C to +82° C).
- Consult factory for other pressures and temperatures.
- Rollers and roller mounting brackets are accessory items. Specify roller position.
- Consult factory for optional chain guard.

Electric rewind
Standard configuration shown

Chain Clutch-Reduction Units
For use on power reels with disc diameter 39" or larger and/or when increased torque and slower rewind speeds are required. Factory installed when specified or available as an accessory item.

PARTS DRAWING – ISO 57

Model Number (For power rewind see Note 4)	Hose Capacity of Reel feet m		Approx. Weight Crank Rewind lb. kg (see Note 3)		Reel Dimensions*** in. mm									
I.D. in. / mm	2-1/2 / 64	3 / 76	NET	SHIP	A	B	D	E	F CRANK	F POWER	G	H	X	Y
O.D. in. / mm	3-3/16 / 81	3-3/4 / 95												
9332-33-34	**30** / 9	**25** / 8	**147** / 67	**217** / 98	**23.75** / 603	**17.5** / 445	**31.5** / 800	**31.75** / 80	**33.75** / 857	**33.25** / 845	**33.88** / 861	**18** / 457	**16.25** / 413	**27.75** / 705
9338-33-34	**45** / 14	**35** / 11	**187** / 85	**257** / 117	**30.25** / 768	**24** / 610	**31.5** / 800	**31.75** / 807	**40.25** / 1022	**39.75** / 1010	**33.88** / 861	**18** / 457	**22.75** / 578	**27.75** / 705
9346-33-34	**60** / 18	**50** / 15	**237** / 108	**372** / 169	**38.25** / 972	**32** / 813	**31.5** / 800	**31.75** / 807	**48.25** / 1226	**47.75** / 1213	**33.88** / 861	**18** / 457	**30.75** / 781	**27.75** / 705
9338-39-40	**90** / 27	**80** / 24	**239** / 108	**480** / 218	**30.25** / 768	**24** / 610	**40** / 1016	**39** / 991	**40.25** / 1022	**39.75** / 1010	**40.38** / 1026	**20.88** / 530	**22.75** / 578	**37** / 940
9334-45-46	**130** / 40	**115** / 35	**361** / 164	**525** / 239	**26.25** / 667	**20** / 508	**46** / 1168	**45** / 1143	**36.25** / 921	**35.75** / 908	**46.38** / 1178	**23.88** / 607	**18.75** / 476	**43** / 1092

Notes:

1. Specifications subject to change.
2. Upon request, reels can be supplied with drum lengths other than shown and with disc sizes in other diameters.
3. Weights shown in chart are for crank rewind models. ADD these amounts for power rewind models.

	Net lbs/kg	Ship lbs/kg
Electric	**40**/18.1	**40**/18.1
Hydraulic	**20**/9.1	**20**/9.1
Air	**20**/9.1	**20**/9.1

4. When ordering power rewind models, prefix model number with:
   A = Air Rewind – Supplied with control valve and 25" air hose.
   EP = Electric Rewind (1/2 HP) – 12v and 24v DC rewind reels are supplied with switch and solenoid; 115v AC rewind reels are not supplied with switch but can be ordered separately.
   HD = Hydraulic Rewind – Not supplied with control valve.
5. **Finish:** Refer to page 3.
6. **Be sure to check dimensions and weights prior to ordering.**

NOTICE: A flexible connector must be used between the inlet pipe and the inlet swivel joint.

*** X, Y indicate mounting holes. See page 5.

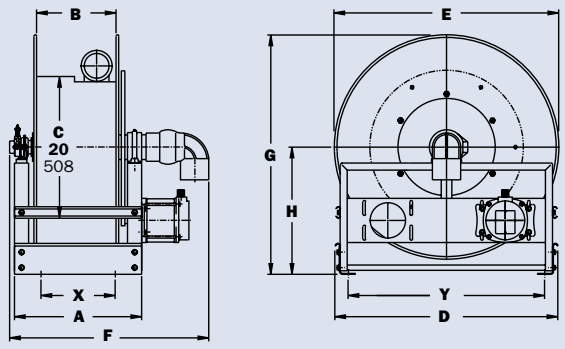

Power rewind shown

Series 1100/AT1200

• Grounds Maintenance • Restaurants/Hotels
• Washdown Operations • Home Use

To handle 3/8" through 1" I.D. hose.

- Continuous flow reels with swivel joint inlet, fluid hub, outlet riser.
- Direct crank rewind and cam-lock drag brake.
- One-piece foot and removable steel handlebar.
- **GH** prefix to model number (e.g., GH1100, GHAT1200) includes garden hose thread on outlet, 5' lead-in hose, hose end clips.

Model 1100

- Standard inlet: 90° ball bearing swivel joint, 1/2" female NPT threads.
- Standard outlet: 1/2" female NPT threads.
- Pressures to 3000 psi (207 bar).
- Temperatures from +20°F to +400°F (-7°C to +204°C).
- Rubber tires standard.

Model AT1200

- Standard inlet: 90° balance pressure swivel joint, 1" female NPT threads.
- Standard outlet: 1" female NPT threads.
- Standard pressures to 2000 psi (138 bar), available up to 4000 psi (276 bar) – must specify.
- Temperatures from -40°F to +250°F (-40°C to +121°C).
- Pneumatic tires standard.

GH1100 configuration shown in optional green powder coat finish

GHAT1200 configuration shown

PARTS DRAWING – 1100–ISO 48; AT1200–ISO 87

Model Number	Hose Capacity of Reel feet m						Approx. Weight lb. kg		Reel Dimensions in. mm							
	I.D. in. mm	3/8 10	1/2 13	5/8 16	3/4 19	1 25	NET	SHIP	A	B	C	D	E	F	G	H
	O.D. in. mm	3/4 19	7/8 22	1 25	1-9/32 33	1-1/2 38										
1100		275 84	175 53	125 38	– –	– –	47 21	100* 46	21.5 546	12 305	6 152	21 533	16.5 419	25.38 645	39 991	13.81 351
AT1200		– –	350 107	250 76	150 46	100 30	86 39	147* 67	24.88 632	11.5 292	8 203	23.31 592	22.75 578	27.25 692	40 1016	17.25 438

Notes:

1. Specifications subject to change.
2. Some assembly required.
3. **Finish:** Refer to page 3.
4. **Be sure to check dimensions and weights prior to ordering.**

*Dimensional weight applies when shipped as a parcel package (via FedEx or UPS Ground).

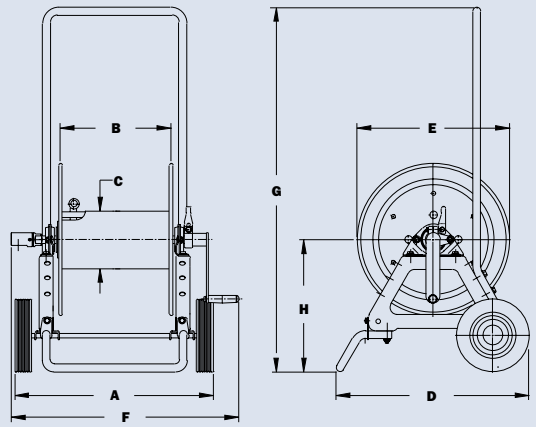

GH1100 shown

Hannay Reels, Inc.
Phone: 518-797-3791
Toll Free: 1-877-467-3357
Domestic FAX: 1-800-733-5464
International FAX: 518-797-3259
hannay.com
reels@hannay.com

Series C1150/ATC1250

• Industrial Maintenance • Construction
• Agriculture • Grounds Maintenance

For storage of hose, cable, rope or wire.

- Direct crank rewind and cam-lock drag brake.
- One-piece foot and removable steel handlebar.

Model C1150

- A 1-1/8" x 2-3/8" (28 mm x 60 mm) opening in the drum to initiate winding.
- Rubber tires standard.

Model ATC1250

- A larger version of the C1150 with a 4-1/2" x 9" (114 mm x 229 mm) drum opening.
- Pneumatic tires standard.

C1150 standard configuration shown

ATC1250 standard configuration shown

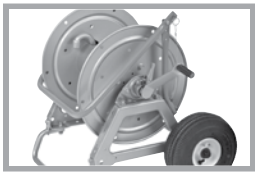

Optional Folding Handle
For compact storage

PARTS DRAWING – C1150–ISO 48; ATC1250–ISO 87

Model Number	Cable Capacity of Reel feet m				Approx. Weight lb. kg		Reel Dimensions in. mm							
	Gauge/Number of Conductors													
	16/3	14/3	12/3	10/3	NET	SHIP	A	B	C	D	E	F	G	H
O.D. in. mm	.390 10	.530 14	.600 15	.690 18										
C1150	**1100** 335	**500** 152	**400** 122	**300** 91	**44** 20	**100*** 46	**21.5** 546	**12** 305	**6** 152	**21** 533	**16.5** 419	**25** 635	**39** 991	**13.81** 351
ATC1250	**1800** 549	**950** 290	**750** 229	**550** 168	**84** 38	**147*** 67	**24.88** 32	**11.5** 292	**8** 203	**23.31** 592	**22.75** 578	**27.25** 692	**40** 1016	**17.25** 438

Notes:

1. Specifications subject to change.
2. Some assembly required.
3. When ordering specify model number, O.D., length, and weight of cable, hose, etc.
4. **Finish:** Refer to page 3.
5. **Be sure to check dimensions and weights prior to ordering.**

*Dimensional weight applies when shipped as a parcel package (via FedEx or UPS Ground).

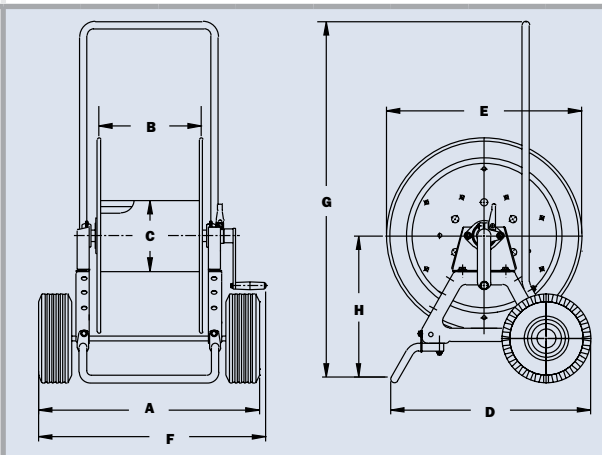

ATC1250 Shown

Series **C1500**

• Hose • Rope • Cable • Wire

To handle single 1/4" through 1" O.D.

- Reels are designed for storage of long lengths of hose, cable, rope, wire or other materials.
- A 1-1/8" x 2-3/8" (28 mm x 60 mm) opening in the drum to initiate winding.
- Manual rewind reels include: cam-lock drag brake, spring actuated pin lock and direct crank rewind.
- Power rewind reels include: chain and sprocket drive powered by electric, hydraulic or air motor..
- Optional divider discs can be placed at almost any point. Be sure to specify spacing of discs on your order.
- Rollers and roller mounting brackets are accessory items. Specify roller position.

Optional External Mounting Brackets

Part No. 9906.0027.

Add 2-1/2" to the X dimensions shown in the chart.

Standard configuration with optional finish shown

PARTS DRAWING – ISO 218

Model Number For power rewind see Note 5	Hose Capacity of Reel feet m					Approx. Weight Crank Rewind lb. kg see Note 4			Reel Dimensions*** in. mm						
	O.D. in. mm	1/4 6	1/2 13	3/4 19	1 25	NET	UPS/ FedEx SHIP Wt.	Freight SHIP Wt.	A	B	E CRANK	E POWER	F CRANK	F POWER	X
C1514-17-18		**1300**	**325**	**150**	**75**	**23**	**65***	**58**	**11**	**6**	**16.5**	**19**	**18.25**	**16.5**	**9.5**
		396	99	46	23	10	30	26	279	152	419	483	464	491	241
C1520-17-18		**–**	**650**	**300**	**150**	**25**	**80***	**60**	**17**	**12**	**16.5**	**19**	**24.25**	**22.5**	**15.5**
		–	198	91	46	11	36	27	432	305	419	483	616	572	394
C1526-17-18		**–**	**900**	**450**	**225**	**27**	**98***	**62**	**23**	**18**	**16.5**	**19**	**30.25**	**28.5**	**21.5**
		–	274	137	69	12	45	28	584	457	419	483	768	724	546
C1530-17-18		**–**	**1000**	**550**	**275**	**29**	**110***	**64**	**27**	**22**	**16.5**	**19**	**34.25**	**32.5**	**25.5**
		–	305	168	84	13	50	29	686	559	419	483	870	826	648

Notes:

1. Specifications subject to change.
2. Upon request, reels can be supplied with drum lengths other than shown and with disc sizes in other diameters.
3. Dimensions reflect pressed frames.
4. Weights shown in chart are for crank rewind models. ADD these amounts for power rewind models (does not apply to FedEx or UPS):

	Net lbs/kg	Ship lbs/kg
Electric	**18**/8.2	**18**/8.2
Hydraulic	**15**/6.8	**15**/6.8
Air	**15**/6.8	**15**/6.8

5. When ordering power rewind models, prefix model number with:
   - **A** = Air Rewind – Supplied with control valve and 18" air hose.
   - **E** = Electric Rewind – 12v and 24v DC rewind reels are supplied with switch and solenoid; 115v AC rewind reels are not supplied with switch but can be ordered separately.
   - **HD** = Hydraulic Rewind – Not supplied with control valve.
6. **Finish:** Refer to page 3.
7. **Be sure to check dimensions and weights prior to ordering.**

*Dimensional weight applies when shipped as a parcel package (via FedEx or UPS Ground).

*** X, Y indicate mounting holes. See page 5.

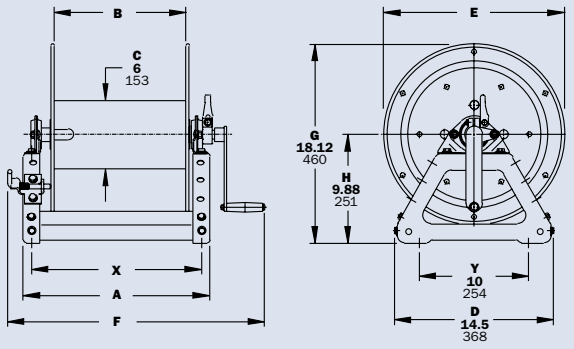

Crank rewind shown

Hannay Reels, Inc. | Phone: 518-797-3791 | Toll Free: 1-877-467-3357 | Domestic FAX: 1-800-733-5464 | International FAX: 518-797-3259 | hannay.com | reels@hannay.com

Series C3200

• Hose • Rope • Cable • Wire

To handle single 1/2" through 1-1/2" O.D.

- A 4-1/2" x 9" (114mm x 229mm) opening in the drum to initiate winding.
- Designed for storage of long lengths of hose, cable, rope, wire or other materials.
- Choose disc rewind or removable direct crank rewind.
- Supplied with spring actuated pin lock.
- Optional divider discs can be placed at almost any point. Be sure to specify spacing of discs on your order.
- Rollers and roller mounting brackets are accessory items. Specify roller position.
- For power rewind, see Series C in cable reels catalog H0507-C.

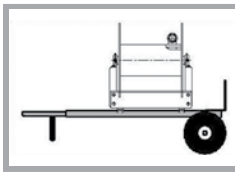

Optional Aluminum Hand Cart

4300-AL mounting available.

Standard configuration with crank handle shown

PARTS DRAWING – ISO 117

Model Number	Hose Capacity of Reel feet m						Approx. Weight Crank Rewind lb. kg		Reel Dimensions*** in. mm						
	O.D. in. mm	1/2 13	3/4 19	1 25	1-1/4 32	1-1/2 38	NET	SHIP	A	B	E CRANK	F CRANK	G	H	X
C3218-25-26		1000	450	225	125	90	85	127	15	9.5	24.75	22.75	27.88	15.5	7
		305	137	69	38	27	39	58	381	241	629	578	708	394	178
C3228-25-26		–	1000	500	325	200	109	151	25.5	20	24.75	33.25	27.88	15.5	17.5
		–	305	152	99	61	49	68	648	508	629	845	708	394	445
C3234-25-26		–	1300	650	400	275	122	164	31.5	26	24.75	39.25	27.88	15.5	23.5
		–	396	198	122	84	55	74	800	660	629	997	708	394	597

Notes:

1. Specifications subject to change.
2. Upon request, reels can be supplied with drum lengths other than shown and with disc sizes in other diameters.
3. Dimensions reflect pressed frames.
4. Series C3200 requires 3-1/2" clearance to remove crank handle.
5. Subtract 5" from "F" dimension for disc rewind on C3200 Series.
6. **Finish:** Refer to page 3.
7. **Be sure to check dimensions and weights prior to ordering.**

*** X, Y indicate mounting holes. See page 5.

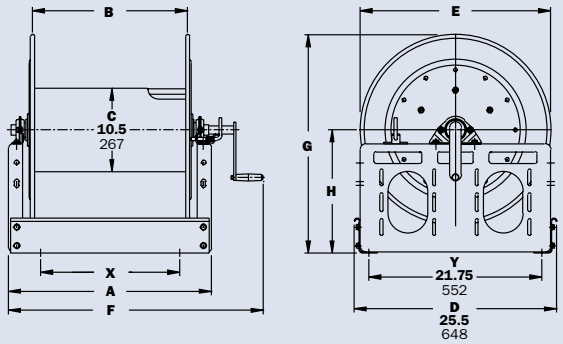

You Can't Buy A Better Reel.

Find reels for every need.

Learn more about all of our reels, including specs, drawings, and even how to select the right reels and accessories for your industry.

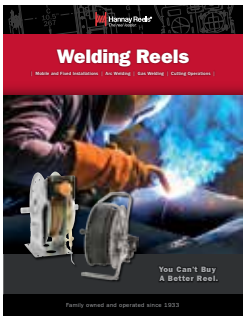

Welding Reels

Includes specs and information on:

- Mobile and fixed installations
- Arc welding
- Gas welding
- Cutting operations

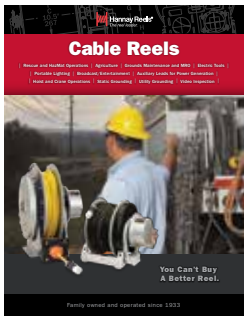

Cable Reels

Find out more about:

- Manual and power rewind reels
- Storage reels
- Reels for live electric cable
- Portable reels
- Static and truck grounding reels

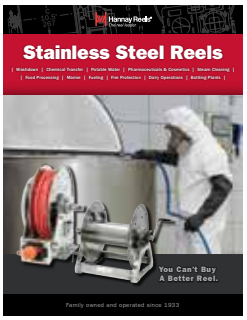

Stainless Steel Reels

Comprehensive information on:

- Spring rewind reels
- Manual rewind reels
- Compact manual rewind reels
- Fuel reels

Ordering & Accessory Guide

Learn more about:

- Selecting the right reel
- Reel components
- Available accessories
- How to spec and order reels and accessories
- Ordering options
- Hannay Reels policies

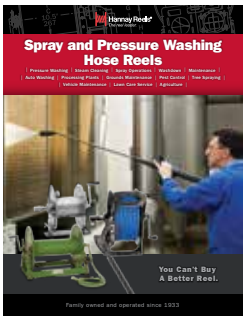

Spray and Pressure Washing Hose Reels

Details and specs for:

- Pressure wash reels
- Manual, spring, and remote controlled power rewind reels
- Portable hose reels
- Small frame model reels

View all our reel catalogs online at hannay.com

Family owned and operated since 1933, Hannay Reels is the world leader in both OEM and aftermarket applications. Hannay offers thousands of standard hose reel and cable reel models, as well as unmatched custom capabilities. We can easily and affordably customize a reel to meet your exact specifications – built to last, delivered fast. Additional catalogs are available through your local Hannay Reels dealer or online at **hannay.com.**

Hannay Reels®
The reel leader.

553 State Route 143 | Westerlo, New York 12193
Email: reels@hannay.com | **hannay.com**

All Hannay reels are constructed of quality heavy gauge steel (optional aluminum or stainless steel also available on most models).

Phone: **518-797-3791**
Toll Free: **1-877-467-3357**
Domestic FAX: **1-800-733-5464**
International FAX: **518-797-3259**

Form H-0308-H REV 7 WEB 10-19

MADE IN U.S.A.

Hannay Reels®
The reel leader.

Reel Product News

Hannay Reels for Corrosive Chemical Applications

Hannay Reels offers the most durable, dependable hose reels for the safe handling of a variety of corrosive and sensitive chemicals.

Our specialty designed reels are used in chemical distribution/delivery for a variety of applications including: commercial/community pools, water parks, toxic waste recycling, bulk handling of acid, bleach, chlorine, pesticides, fertilizers and more.

Specifications:

- Handles 3/8" through 1-1/2" ID hose, ranging from 50 ft up to 200 ft in length. For larger ID hose please consult factory.
- Standard inlet: CPVC swivel joint resists corrosion and provides longer life.
- Slotted hub for hose passage, with drum cut out on opposite side from the swivel joint. Fluid will not come in contact with metal, as the hose acts as the sole fluid path.
- Manual or power rewind with optional auxiliary crank rewind on specific models.
- Special swivel mounting bracket with clamp to hold the CPVC swivel in place.

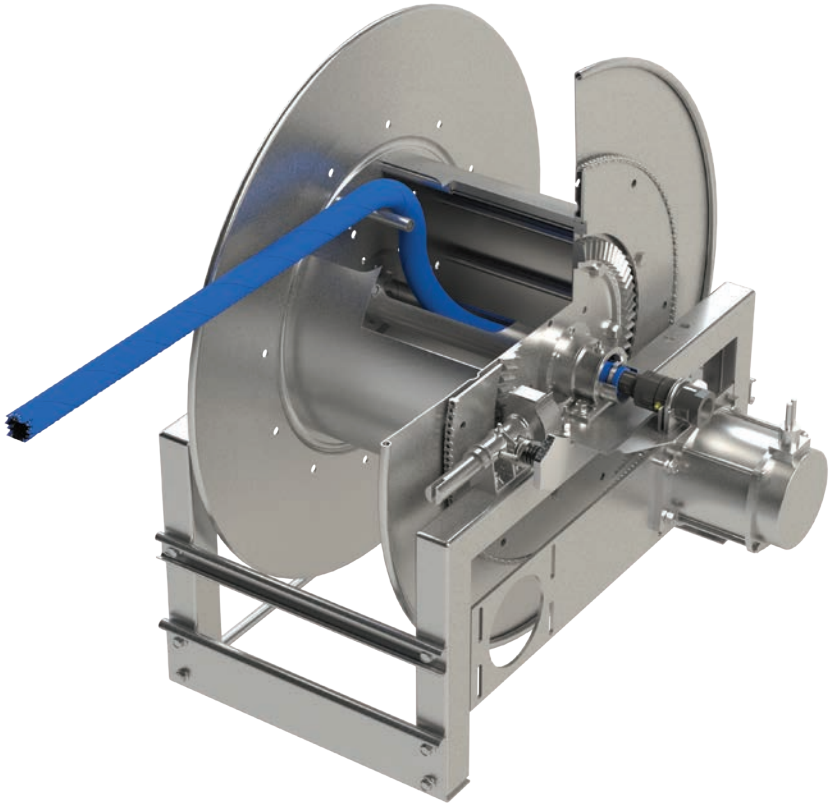

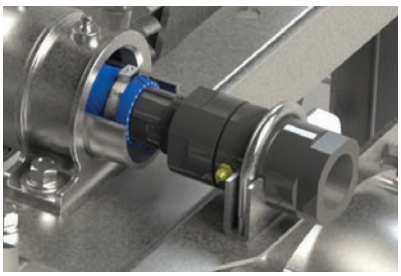

Top: Detailed cut-out of slotted hub for hose passage

Right: Close-up of CPVC swivel, clamp and mounting bracket.

ORDERING INFORMATION:

Contact Hannay Reels Inside Sales Department at: 877-467-3357 or email reels@hannay.com for more information. Be sure to provide detailed specifications on hose type, ID/OD and application information when ordering.

Email: **reels@hannay.com**
hannay.com
Toll Free: **877-467-3357**
Phone: **518-797-3791**
Domestic FAX: **800-733-5464**
International FAX: **518-797-3259**

FORM H-1907-CHC

MADE IN THE USA SINCE 1933

Hannay Reels®
The reel leader.

Reel Product News

Hannay Special Heavy-Duty 1500 Series Reels

The Hannay Reels 1500 series reel, used for pressure washing, steam cleaning, high and low pressure water supply, air and more, can be upgraded to handle heavy-duty jetting operations as well.

Upgrades include providing a stiffer spool to counter high-pressure hose expansion concerns, a reinforced frame for extra rigidity and a larger drum to accommodate hose with a higher bend radius.

Standard Features:

To handle single 3/8" through 5/8" I.D. hose.

- Lightweight, compact reels designed for long lengths of hose in manual or power rewind.
- Direct crank rewind is permanently attached.
- Manual reels include cam-lock drag brake and pin lock. Power reels include chain and sprocket drive powered by electric motor.
- Standard inlet: 90° full flow swivel joint, 1/2" FNPT threads. Standard outlet: 1/2" FNPT threads.
- Standard pressures up to 3000 psi (207 bar) and temperatures to +400°F (+204°C).

Upgrade Options:

- 3/16" thick discs are 2.5 times thicker than standard to better handle high pressure hose expansion.
- 8" diameter steel 14 gage drum to handle hose with higher bend radius.
- Welded frame base for superior strength and rigidity.
- Optional pressures of 5,000 psi or 10,000 psi available.

E1500 Series Reel
Shown with special heavy-duty options.

ORDERING INFORMATION:

Contact Hannay Reels Inside Sales Department at: 877-467-3357 or email reels@hannay.com for more information.

Email: **reels@hannay.com**
hannay.com
Toll Free: **877-467-3357**
Phone: **518-797-3791**
Domestic FAX: **800-733-5464**
International FAX: **518-797-3259**

MADE IN THE USA SINCE 1933

Hannay Reels®
The reel leader.

Reel Product News

Hannay Offers Industrial Vacuum Reel Options

Four new series of industrial strength reels are now available. The VAC4000, VAC900, VACN900 & VAC2900 are designed specifically for shop vacuum applications, car detailing operations and general industrial vacuum needs.

These reels handle up to 50' of 1-1/2" or 2" ID vacuum hose, are constructed of heavy-duty steel and available in manual or spring return to automatically rewind hose.

VAC4000 Standard Features:

- To handle 1-1/2" ID industrial vacuum hose.
- Includes permanently attached crank handle and cam-lock drag brake.
- Rollformed channel frame for heavy duty applications.
- Internal hub connection to fit hose cuff.

VAC4000 Series
Standard configuration shown (hose not included).

Model Number	Hose Capacity of Reel feet m		Approx. Weight lb. kg			Reel Dimensions*** in. mm									
	I.D. in. mm	1-1/2 38	NET	UPS/ FedEx SHIP Wt.	Freight SHIP Wt.	A	B	C	D	E	F	G	H	X	Y
	O.D. in. mm	1.84 47													
VAC4020-17-18-8		**25** 8	**38** 17	**82** 37	**73** 33	**17** 431	**12** 305	**8** 203	**18** 457	**16.50** 419	**24.88** 632	**18.13** 460	**9.88** 251	**9.50** 241	**14.25** 362
VAC4024-17-18-8		**35** 11	**42** 19	**94** 43	**77** 35	**21** 533	**16** 406	**8** 203	**18** 457	**16.50** 419	**28.88** 734	**18.13** 460	**9.88** 251	**13.50** 343	**14.25** 362
VAC4028-17-18-8		**50** 15	**46** 21	**98** 45	**81** 37	**25** 635	**20** 508	**8** 203	**18** 457	**16.50** 419	**32.88** 835	**18.13** 460	**9.88** 251	**17.50** 445	**14.25** 362

Notes:

1. Specifications subject to change.
2. Upon request, reels can be supplied with drum lengths other than shown.
3. Dimension "F" is the overall length of standard model reels.
4. **Be sure to check dimensions and weights prior to ordering.**

* Dimensional weight applies when shipped as a parcel package (via FedEx or UPS Ground).

*** X, Y indicate mounting holes. (Also applies for external mounting brackets.)

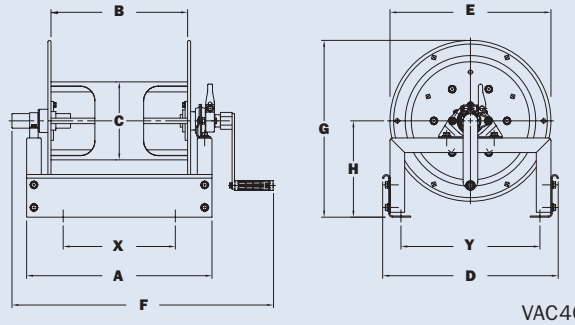

VAC4000

See reverse for additional reel models.

Email: **reels@hannay.com**
hannay.com
Toll Free: **877-467-3357**
Phone: **518-797-3791**
Domestic FAX: **800-733-5464**
International FAX: **518-797-3259**

MADE IN THE USA SINCE 1933

Hannay Reels®
The reel leader.

Reel Product News

VACN900 Standard Features:

- To handle 1-1/2" ID industrial vacuum hose.
- N-series has a narrow frame and compact mounting base, allows for different mounting options: floor, ceiling or wall.
- Non-sparking ratchet assembly locks hose at different payout lengths and 4-way roller assembly to guide hose.

VAC900/VAC2900 Standard Features:

- VAC900: to handle 1-1/2" ID vacuum hose.
  VAC2900: to handle 2" ID vacuum hose.
- Roll-formed channel frame for heavy-duty applications, allows different mounting options: floor, ceiling or wall.
- Non-sparking ratchet assembly locks hose at different payout lengths and 4-way roller assembly to guide hose.

◄ VACN900 Series
standard configuration shown with "SR" roller position (hose not included).

VAC900 Series ►
optional "TR" roller position shown (hose not included).

Model Number	Hose Capacity of Reel feet m		Approx. Weight lb. kg		Standard Roller Assy.	Reel Dimensions*** in. mm								
	I.D. in. mm	1-1/2 38	2 51	NET	SHIP		A	B	D	E	F	G	H	X	Y
	O.D. in. mm	1.84 47	2.34 59												
VACN918-23-24-10.5L		25 8	– –	60 27	95 43	N306	12 305	6 152	12 305	24.50 622	13.38 340	24 610	12.63 320	10 254	10 254
VACN920-23-24-10.5L		35 11	– –	62 28	97 44	N308	14 356	8 203	12 305	24.50 622	15.68 391	24 610	12.63 320	12 305	10 254
VAC920-28-29-10.5J		50 15	– –	76 34	111 50	R308	13.25 337	8 203	28.5 724	26.75 679	16.5 419	28.25 718	14.88 378	8.5 216	23.25 591
VAC2920-28-29-10.5J		– –	25 8	77 35	112 51	R2308	13.25 337	8 203	28.5 724	26.75 679	16.5 419	28.25 718	14.88 378	8.5 216	23.25 591
VAC2922-28-29-10.5J		– –	35 11	79 36	113 51	R2310	15.25 387	10 254	28.5 724	26.75 679	18.5 470	28.25 718	14.88 378	10.5 267	23.25 591
VAC2920-33-34-10.5J		– –	50 15	92 42	127 58	R2308	13.25 337	8 203	33 838	31.25 794	16.5 419	33.63 854	17.75 451	8.5 216	27.75 705

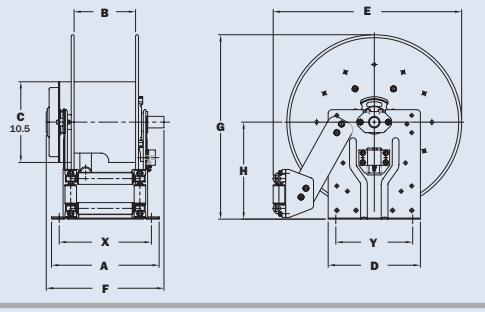

VACN900

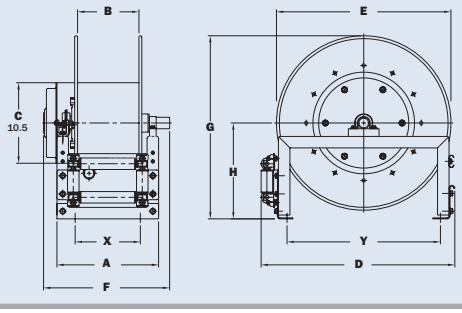

VAC900/VAC2900

Available Roller Positions

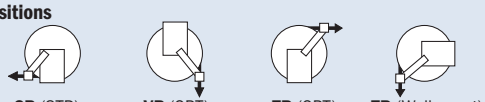

SR (STD) **VR** (OPT) **TR** (OPT) **TR** (Wallmount)

Notes: A hose stop is necessary to keep spring from unwinding.

1. Specifications subject to change.
2. Reel models and capacities shown are for standard drag applications; for vertical lift applications, consult factory.
3. **Be sure to check dimensions and weights prior to ordering.**

*** X, Y indicate mounting holes.

Email: **reels@hannay.com**
hannay.com

Toll Free: **877-467-3357**
Phone: **518-797-3791**

Domestic FAX: **800-733-5464**
International FAX: **518-797-3259**

MADE IN THE USA SINCE 1933